14-UNIT MULTIFAMILY BUILDING
12761 CASWELL AVE.
LOS ANGELES, CA 90066

1-PROJECT DATA

1)	PROJECT ADDRESS:	12761 CASWELL AVE. LOS ANGELES, CA 90064
2)	OWNER:	
3)	APN#:	4236-018-021
4)	TRACT:	DEL MAR
5)	MAP REFERENCE:	M B 10-76
6)	BLOCK:	NONE
7)	LOT:	138
8)	LOT AREA:	7,118.5 SF
9)	ZONING:	R3-1
10)	MAX FAR:	3:1
11)	HEIGHT LIMIT:	45'- 0"
12)	PROPOSED HEIGHT:	56'-0" (11'-0" INCREASE)
13)	SB 1818 INCENTIVES REQUESTED:	1. HEIGHT INCREASE BY 11'-0" to 56'-0" AND WAIVE 11'-0" SETBACK ABOVE THE 45' R3-1 HEIGHT LIMITATION 2. REDUCTION IN 1 SIDE YARD SETBACK FROM 7'-0" to 8'-0" 3. INCREASE IN FAR FROM 3.0 to 3.16 OR 5% INCREASE
14)	PROPOSED UNITS:	(10) 2-BEDROOM UNITS (2) 1- BEDROOM UNITS (2) STUDIO UNITS **14-UNITS TOTAL**
	# OF AFFORDABLE UNITS:	1- VERY LOW INCOME 1- LOW INCOME
15)	REQUIRED YARDS:	15'-0" FRONT YARD 15'-0" REAR YARD 8'-0" SIDE YARDS
16)	PROVIDED YARDS:	1) 15'-0" F.Y 2) 15'-0" R.Y = 1/2" ALLEYWAY +7'-6" R.Y = 7'-6" + 7'-6" 3) 8'-0" EAST YARD 4) 7'-0" WEST YARD
17)	BUILDABLE AREA:	142.25' - 15' FY - 7.5' RY = 119.77' 50.0' - 5' SY - 5' SY = 40.0' 119.77' X 40.0' = 4,789.71 SF
18)	MAX ZONING CODE SF:	4,789 X 3 = 14,367 SF MAX
19)	PROPOSED ZONING CODE SF:	15,177 SF
20)	PROPOSED FAR:	15,177 SF / 4,789 SF = 3.16 (>3.0) or 5.06 % INCREASE OVER BASE F.A.R
21)	BUILDING OCCUPANCY:	R2 (MULTIFAMILY) / S2 (PARKING GARAGE)
22)	CONSTRUCTION TYPE:	5- STORIES TOTAL: 5 STORIES TYPE V-A RESIDENTIAL OVER 1 LEVEL TYPE I-A PARKING GARAGE AT GRADE AND 1 LEVEL SUB-TERRANEAN PARKING
23)	APPLICABLE CODES:	2019 CBC W/2020 LABC AMENDMENTS
24)	PROJECT DESCRIPTION:	CONSTRUCTION OF A NEW 5-STORY, MULTIFAMILY BUILDING CONSISTING OF 14 UNITS AND 22 PARKING SPACES
25)	FIRE SPRINKLER:	FULLY SPRINKLERED PER NFPA-13 THIS BUILDING AND GARAGE MUST BE EQUIPPED WITH AN AUTOMATIC FIRE EXTINGUISHING SYSTEM, COMPLYING WITH NFPA-13. THE SPRINKLER SYSTEM SHALL BE APPROVED BY PLUMBING DIV. PRIOR TO INSTALLATION.
26)	FIRE ALARM	MANUAL FIRE ALARM SYSTEM ERRCS PER FPB REGULATION #105 PROVIDE 2-HR SHAFT ENCLOSURE FOR ERRCS CONDUIT
27)	APPROVED LOD CASE #	

100% PRIVATELY FUNDED.
NOT A PUBLIC HOUSING.
NO TAX CREDIT RECEIVED.

2-PARKING CALCULATION

PARKING CALCULATION		
1-CAR PARKING		
TYPE	**# UNITS**	**TOTAL**
PARKING REQUIREMENTS:		
STUDIO/1BDR	-	1
2BDR/3BDR	-	2
4BDR+	-	2.5
STUDIO UNITS	2	2 SPACES
1-BEDROOM	2	2 SPACES
2 BEDROOM	9	9 SPACES
3 BEDROOM	1	1 SPACE
TOTAL REQUIRED		24 SPACES
-10% BICYCLE REDUCTION =24-2		22 SPACES
TOTAL ADJUSTED REQUIRED		22 SPACES
STANDARD		12
ADA-VAN ACCESSIBLE		1
EV		1
COMPACT		8
TOTAL PROVIDED		22
2-BICYCLE PARKING		
TYPE	**# UNITS**	**TOTAL**
SHORT-TERM SPACES	1~25	
REQUIRED	14 UNITS / 10	1.4 ~2
PROVIDED		2
LONG-TERM SPACES	1~25	
REQUIRED	14 UNITS / 1	14
PROVIDED		14
TOTAL PROVIDED		16

3-SCHOOL FEES SF

1ST FLOOR	1,079	SF
2ND FLOOR	4,167	SF
3RD FLOOR	4,167	SF
4TH FLOOR	4,167	SF
5TH FLOOR	4,167	SF
TOTAL	**17,747**	**SF**
GARAGE (NOT INCLUDED)	**5,405**	**SF**

4-SB 1818 DENSITY CALCULATION

LOT AREA	7,118.5	SF
1/2 ALLEYWAY	375	SF
TOTAL	**7,487**	**SF**
7,487 SF / 800 SF LOT AREA PER DWELLING =	**10 BASE UNITS (ROUNDED UP)**	
35% DENSITY BONUS = 10 X 1.35 =	**14 UNITS (ROUNDED UP)**	
11% VERY LOW INCOME UNIT =	**2 VERY LOW INCOME UNITS 12 MARKET RATE UNITS**	

5-UNIT MIX SUMMARY

UNIT MIX SUMMARY				
UNIT #	**# OF BEDROOMS**	**# OF HABITABLE ROOMS**	**COMMON OPEN SPACE REQ (SF)**	**COMMENTS**
201	3	4	175	LOW INCOME
202	STUDIO	1	100	
203	1	2	100	
204	2	3	125	
301	2	3	125	
302	STUDIO	1	100	
303	1	2	100	
304	2	3	125	
401	2	3	125	
402	2	3	125	VERY LOW INCOME
403	2	3	125	
501	2	3	125	
502	2	3	125	
503	2	3	125	
TOTAL	**25**	**37**	**1,700**	
	BEDROOMS	**HABITABLE ROOMS**	**SF**	
UNIT BREAKDOWN				
STUDIOS		**2**		
1 BEDROOM UNITS		**2**		
2 BEDROOM UNITS		**9**		
3 BEDROOM UNITS		**1**		
TOTAL UNITS		**14**		

6-COMMON OPEN SPACE

COMMON OPEN SPACE CALCULATIONS:			
1-REQUIRED COMMON OPEN SPACE AREA			
TYPE	**# UNITS**	**SF**	**TOTAL SF**
STUDIOS	**2**	x 100 SF	200
1-BDRM UNITS	**2**	x 100 SF	200
2-BDRM UNITS	**9**	x 125 SF	1,125
3-BDRM UNITS	**1**	x 175 SF	175
TOTAL			**1,700**
2-PRIVATE OPEN SPACE - REDUCTIONS			
TYPE	**ACTUAL SQ. FT.**		**TOTAL SF**
BALCONIES @ UNIT #			
204	70		50
304	70		50
403	70		50
503	70		50
TOTAL	280		**200**
3- COMMON OPEN SPACE - PROVIDED			
TYPE			**TOTAL SF**
ROOF			1,500
TOTAL			**1,500**
TOTAL PROVIDED			**1,700**
TOTAL REQUIRED COMMON OPEN SPACE			**1,700**

7-FLOOR AREA-ZONING CODE

FLOOR AREA- ZONING CODE							
UNIT #	1ST FLR (SF)	2ND FLR (SF)	3RD FLR (SF)	4TH FLR (SF)	5TH FLR (SF)	COVERED BALCONY	**TOTAL**
201		1040					**1040**
202		570					**570**
203		443					**443**
204		1109					**1109**
301			1040				**1040**
302			570				**570**
303			443				**443**
304			1109				**1109**
401				1040			**1040**
402				988			**988**
403				1109			**1109**
501					1040		**1040**
502					988		**988**
503					1109		**1109**
SUBTOTAL		3,162	3,162	3,137	3,137	0	**12,598**
LOBBY	580						**580**
TRASH ROOM	124						**124**
HALLWAY	-	381	381	381	381		**1,524**
UTILITY CLOSET	-			31	31		**62**
TOTAL							**14,888**
GARAGE (NOT INCLUDED)							**2,290**

8-FLOOR AREA-BUILDING CODE

FLOOR AREA- BUILDING CODE							
UNIT #	1ST FLR (SF)	2ND FLR (SF)	3RD FLR (SF)	4TH FLR (SF)	5TH FLR (SF)	COVERED BALCONY	**TOTAL**
201		1040				0	**1040**
202		570					**570**
203		443					**443**
204		1109					**1109**
301			1040			0	**1040**
302			443				**443**
303			570				**570**
304			1109				**1109**
401				1040		0	**1040**
402				988			**988**
403				1109			**1109**
501					1040	0	**1040**
502					988		**988**
503					1109		**1109**
SUBTOTAL	-	3,162	3,162	3,137	3,137	0	**12,598**
LOBBY	580						
STAIR #1	266	266	266	266	266		**1330**
STAIR #2	266	266	266	266	266		**1330**
HALLWAY	-	381	381	381	381		**1524**
UTILITY CLOSET	-	-	-	31	31		**62**
TRASH ROOM	124	-	-	-	-		**124**
TOTAL							**16,968**

9-ABBREVIATIONS

(E), EX, EXIST	EXISTING
(N)	NEW
AFF	ABOVE FINISH FLOOR
ALUM	ALUMINIUM
B	BOTTOM
BDR	BEDROOM
BO	BOTTOM OF
C/L	CENTERLINE
CBC	CALIFORNIA BUILDING CODE
CJ	CEILING JOIST
CL	CLOSET
CLG	CEILING
CLR	CLEAR
D, DIA	DIAMETER
DBL	DOUBLE
DR	DOOR
EQ	EQUAL
FF	FINISH FLOOR
FJ	FLOOR JOIST
FTG	FOOTING
GA	GAUGE
GC	GENERAL CONTRACTOR
GL	GLASS
GWB	GYPSUM WALL BOARD
HR	HOUR
MSTR	MASTER
N/A	NOT APPLICABLE
NIC	NOT IN CONTRACT
NTS	NOT TO SCALE
OC	ON CENTER
OPP	OPPOSITE
PT	PRESSURE TREATED
PTD	PAINTED
R.	RISER
RCP	REFLECTED CEILING PLAN
RO	ROUGH OPENING
RR	ROOF RAFTER
RTD	RATED
SC	SOLID CORE
SF	SQUARE FEET
SIM	SIMILAR
SSD	SEE STRUCTURAL DRAWINGS
ST STL	STAINLESS STEEL
T&G	TONGUE AND GROOVE
T.	TREAD
TBD	TO BE DETERMINED
TO	TOP OF
TYP	TYPICAL
UO	UNDERSIDE OF
UON	UNLESS OTHERWISE NOTED
VIF	VERIFY IN FIELD
W/	WITH
WD	WOOD
WIC	WALK-IN CLOSET

10-DRAWING INDEX

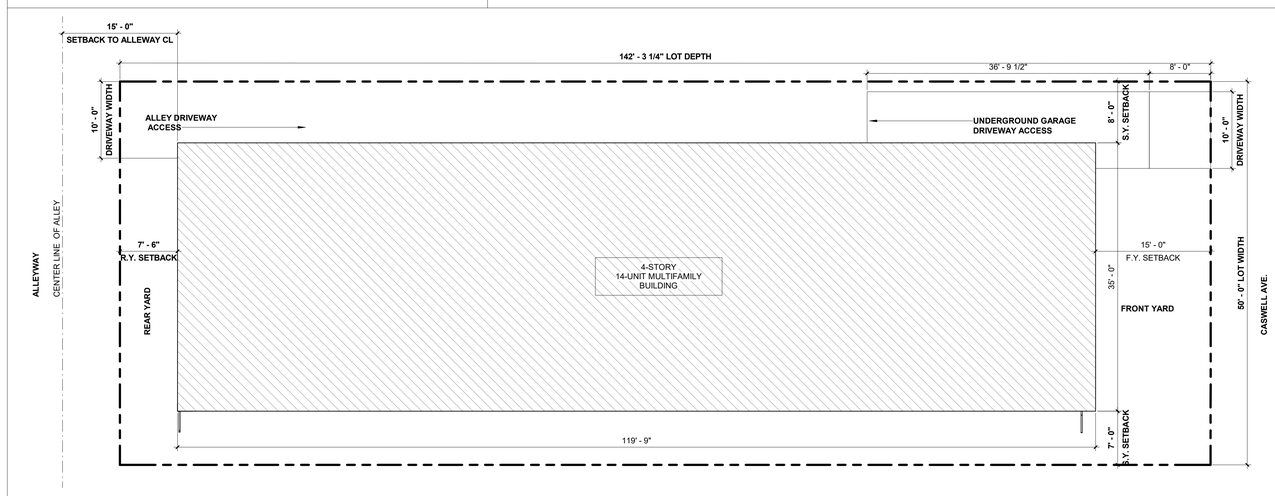

1 PLOT PLAN
1/8" = 1'-0"

VICINITY MAP

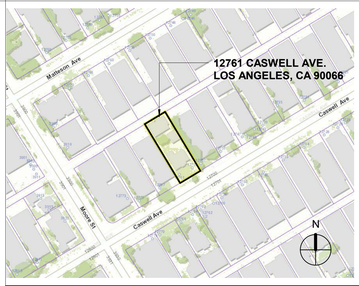

SYMBOLS

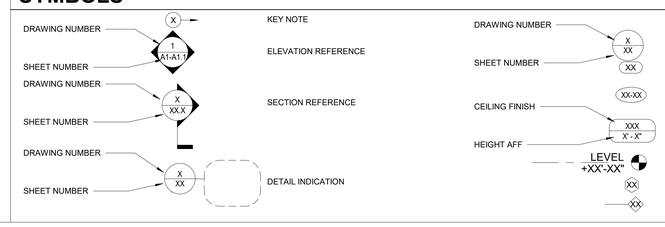

ARCHITECT:
Aaron Brumer & Assoc, Architects
10999 Riverside Drive, Suite 300
North Hollywood, CA 91602
(310) 422-9234
Email - aaron@aaronbrumer.com

SURVEY:
M&G Civil Engineering & Land Surveying
347 S. Robertson Blvd.
Beverly Hills, CA 90211
(310)-659-0871
Email - info@mglandsur.com

LANDSCAPE:
Savage Land Design
680 Langdsorf Dr, Suite 202B
Fullerton, Ca 92831
(714)-878-0335
Email - savagelanddesign@att.net

PROJECT:
14-UNIT MULTIFAMILY DEVELOPMENT
12761 Caswell Ave, Los Angeles, CA 90066

ISSUE	DATE	DESCRIPTION
1	7/30/2021	CITY PLANNING SUBMITTAL

ISSUE	DATE	DESCRIPTION

STAMP
LICENSED ARCHITECT
AARON BRUMER
No. C-30005
REN. 11-30-2021
STATE OF CALIFORNIA

DRAWING TITLE
COVER SHEET

T-00

12761 CASWELL

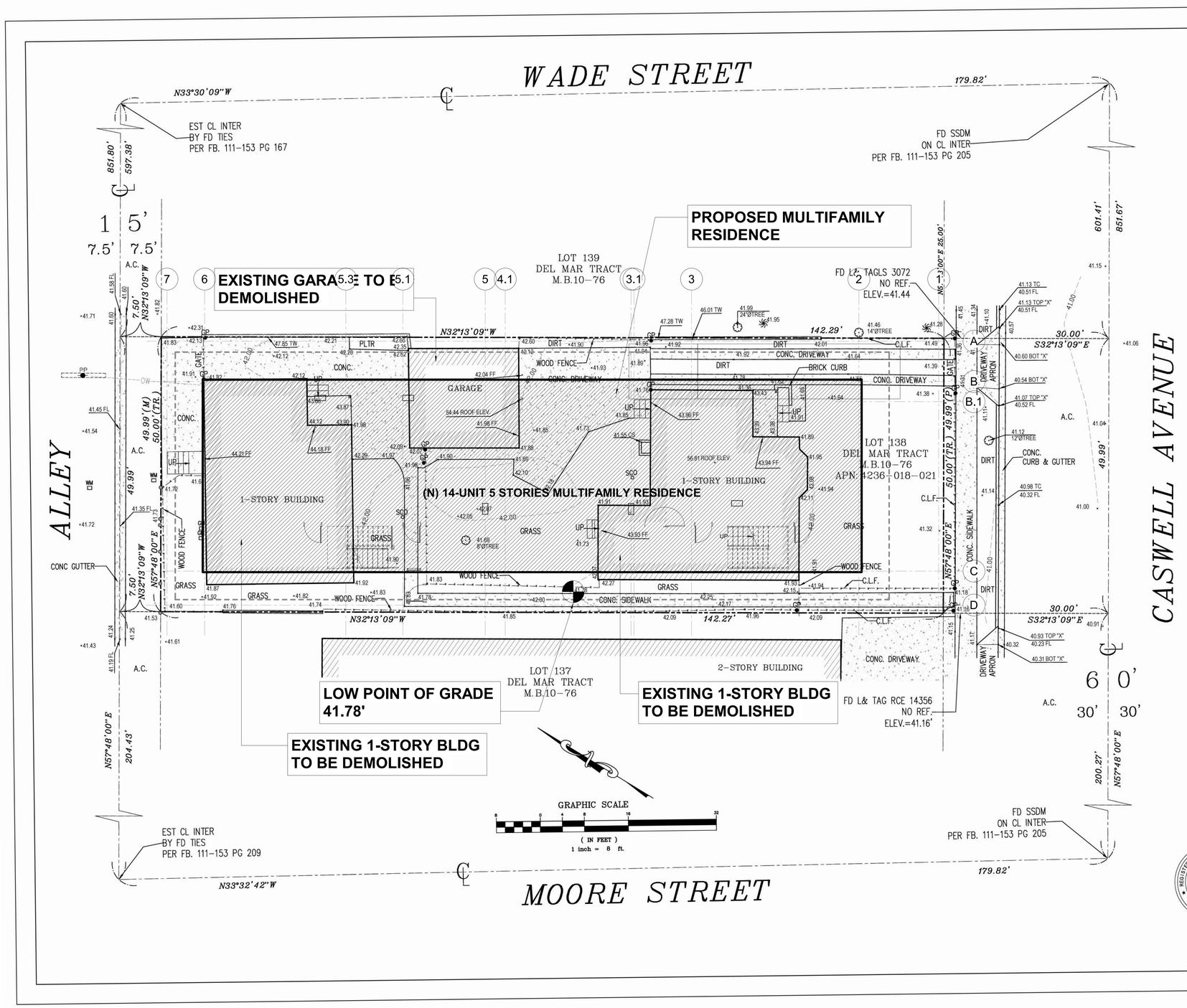

LEGAL DESCRIPTION:

THE LAND REFERRED TO IN THIS SURVEY IS SITUATED IN THE CITY OF LOS ANGELES, COUNTY OF LOS ANGELES, STATE OF CALIFORNIA, AND IS DESCRIBED AS FOLLOWS:

LOT 138 OF DEL MAR TRACT AS PER MAP RECORDED IN BOOK 10 PAGE 76 OF MAPS, IN THE OFFICE OF THE COUNTY RECORDER OF SAID COUNTY.

APN: 4236-018-021

BASIS OF BEARINGS:

THE BEARING NORTH 57° 48' 00" EAST, ON THE CENTERLINE OF CASWELL AVENUE AS SHOWN ON DEL MAR TRACT, IN THE CITY OF LOS ANGELES, COUNTY OF LOS ANGELES, AS PER MAP RECORDED IN BOOK 10, PAGE 76, OF MAPS IN THE OFFICE OF THE COUNTY RECORDER OF SAID COUNTY.

LAND AREA:

CONTAINING AN AREA OF 7,112.13 SQ. FT., OR 0.1632 ACRES, MORE OR LESS.

BENCHMARK:

STRUCTURE ID: 53413107
DESCRIPTION: FD MH ON CL OF ALLEY
ELEV. = 42.50 FT.

SURVEYOR'S NOTE:

1. THIS MAP IS NOT A BOUNDARY SURVEY. NO PROPERTY CORNERS HAVE BEEN SET AS PART OF THIS WORK.

2. SURVEY MONUMENTS FOUND IN THE COURSE OF THIS MAPPING HAVE BEEN SET BY OTHERS, AND USED ONLY AS REFERENCE FOR PURPOSES OF TOPOGRAPHIC MAPPING, WITHOUT THE VERIFICATION OF ITS AGREEMENT WITH APPLICABLE LEGAL DESCRIPTIONS AND SENIORITY OF DEEDS.

3. RELATION OF TOPOGRAPHIC FEATURES (FENCES, WALLS, TREES, POWER POLES, ETC.) TO PROPERTY LINES SHOWN ON THIS MAP IS SUBJECT TO THE ADJUSTMENTS TO ANY BOUNDARY SURVEY THAT IS TO BE DONE ON THE PROPERTY.

4. THIS SURVEY WAS PREPARED WITHOUT THE BENEFIT OF A TITLE REPORT. EASEMENTS, IF ANY, ARE NOT SHOWN.

SYMBOLS:

COLUMN
GAS METER
GATE POST
PALM TREE
POST
POWER POLE
SEWER CL OUT
SEWER MANHOLE
TREE
WATER METER

LEGEND:

APN	ASSESSOR'S PARCEL NUMBER	(P)	PRORATED
A.C.	ASPHALT CONCRETE	P.C.	PROPERTY CORNER
BM	BENCHMARK	PG	PAGE
BW	BACK OF WALK	R /PL	PROPERTY LINE
BLDG	BUILDING	PLTR	PLANTER
C/CL	CENTERLINE	PROD	PRODUCED (PROLONGED)
C.L.F.	CHAIN LINK FENCE	REF	REFERENCE
COL	COLUMN	RCE	REGISTERED CIVIL ENGINEER
CONC.	CONCRETE	SSDM	STANDARD SURVEY DISC MONUMENT
COR.	CORNER	SMH	SEWER MANHOLE
CS	CRAWL SPACE	SPK/W	SPIKE & WASHER
EG	EXISTING GRADE	TC	TOP OF CURB ELEV.
EST	ESTABLISH	TR.	TRACT MAP
FB	FIELD BOOK	TW	TOP OF WALL ELEV.
FD	FOUND		
FF	FINISH FLOOR ELEV.		
FL	FLOWLINE ELEV.		
FS	FINISH SURFACE ELEV.		
INTER	INTERSECTION		
LS	LAND SURVEYOR		
(M)	MEASURED		
M.B.	MAP BOOK		

PROPERTY LINE
CENTERLINE
WALL LINE
BUILDING LINE
FENCE LINE
OVERHEAD WIRE

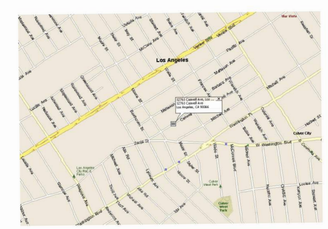

VICINITY MAP
NOT TO SCALE

REGISTERED PROFESSIONAL ENGINEER
CYNTHIA A. DE LEON
No. C-31604
EXP. 12-31-2022
CIVIL
STATE OF CALIFORNIA

M&G CIVIL ENGINEERING AND LAND SURVEYING

TITLE: TOPOGRAPHIC SURVEY
12761 CASWELL AVENUE, LOS ANGELES, CA 90066

CLIENT: MR. YARON SADKA
JOB NO.: 21-17479
SCALE: 1" = 8'
DATE: 03/11/2021
DESIGNED BY: F.G. / S.A.
REVISION (S):
DRAWN BY: MO
CHECKED BY: C.DL.
SHEET 1 OF 1 SHEET

M&G CIVIL ENGINEERING & LAND SURVEYING
347 S. ROBERTSON BLVD.
BEVERLY HILLS, CALIFORNIA 90211
TEL. (310) 659-0871 FAX (310) 659-0845
info@mglandsur.com www.mglandsur.com

S:\DRAWINGS\21.17479.DWG (C)

ARCHITECT:
Aaron Brumer & Assoc, Architects
10999 Riverside Drive, Suite 300
North Hollywood, CA 91602
(310) 422-9234
Email - aaron@aaronbrumer.com

SURVEY:
M&G Civil Engineering & Land Surveying
347 S. Robertson Blvd.
Beverly Hills, CA 90211
(310)-659-0871
Email - info@mglandsur.com

LANDSCAPE:
Savage Land Design
680 Langdsorf Dr, Suite 202B
Fullerton, Ca 92831
(714)-878-0335
Email - savagelanddesign@att.net

PROJECT:
14-UNIT MULTIFAMILY DEVELOPMENT
12761 Caswell Ave, Los Angeles, CA 90066

ISSUE	DATE	DESCRIPTION
1	7/30/2021	CITY PLANNING SUBMITTAL

ISSUE	DATE	DESCRIPTION

STAMP
LICENSED ARCHITECT
AARON BRUMER
No. C-30005
REN. 11-30-2021
STATE OF CALIFORNIA

DRAWING TITLE
SURVEY & LOW POINT OF GRADE

T-02

12761 CASWELL

CASWELL STREET VIEW-1

CASWELL STREET VIEW-2

CASWELL ALLEY VIEW-1

CASWELL ALLEY VIEW-2

ARCHITECT:
Aaron Brumer & Assoc, Architects
10999 Riverside Drive, Suite 300
North Hollywood, CA 91602
(310) 422-9234
Email - aaron@aaronbrumer.com

SURVEY:
M&G Civil Engineering & Land Surveying
347 S. Robertson Blvd.
Beverly Hills, CA 90211
(310)-659-0871
Email - info@mglandsur.com

LANDSCAPE:
Savage Land Design
680 Langdsorf Dr, Suite 202B
Fullerton, Ca 92831
(714)-878-0335
Email - savagelanddesign@att.net

PROJECT:

14-UNIT MULTIFAMILY DEVELOPMENT

12761 Caswell Ave, Los Angeles, CA 90066

ISSUE	DATE	DESCRIPTION
1	7/30/2021	CITY PLANNING SUBMITTAL

ISSUE	DATE	DESCRIPTION

STAMP

LICENSED ARCHITECT
AARON BRUMER
No. C-30005
REN. 11-30-2021
STATE OF CALIFORNIA

DRAWING TITLE

3D RENDERINGS

T-10

12761 CASWELL

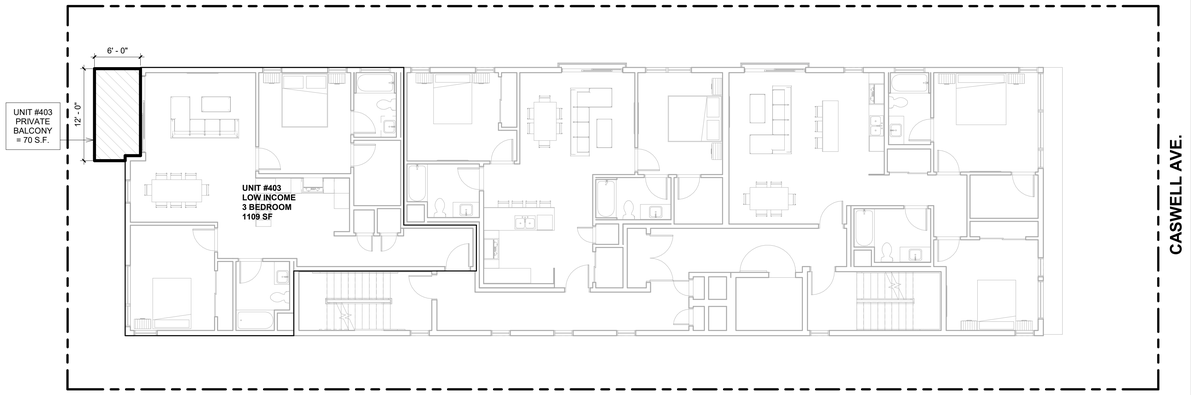

3 1/8" = 1'-0" 4TH-FLOOR - OPEN SPACE

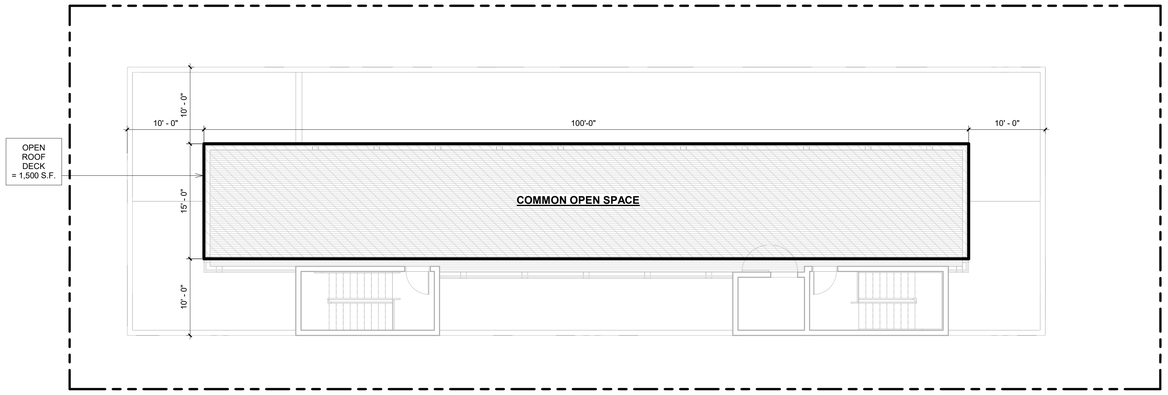

5 1/8" = 1'-0" ROOF PLAN - OPEN SPACE

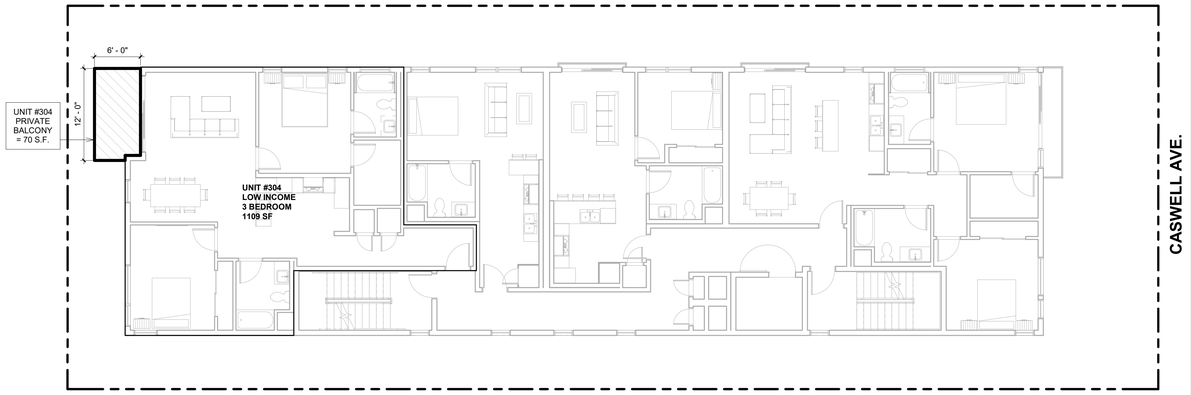

2 1/8" = 1'-0" 3RD-FLOOR - OPEN SPACE

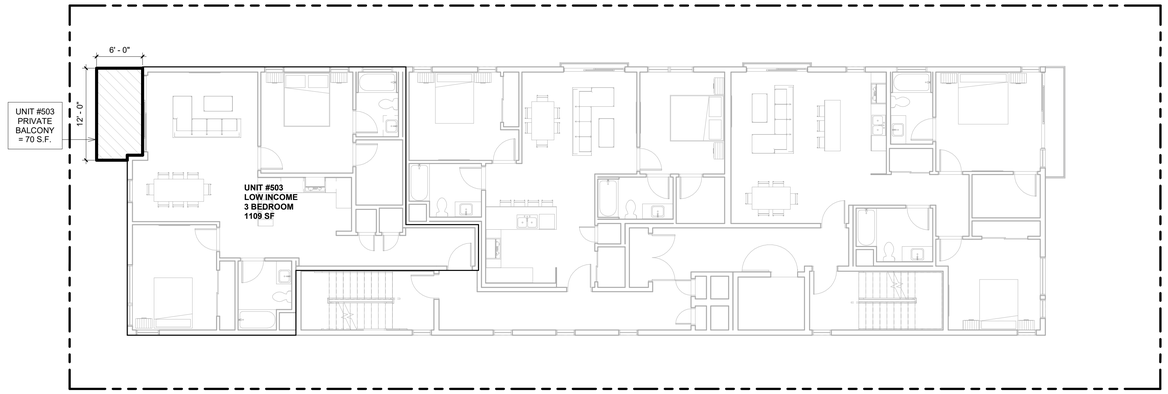

4 1/8" = 1'-0" 5TH-FLOOR - OPEN SPACE

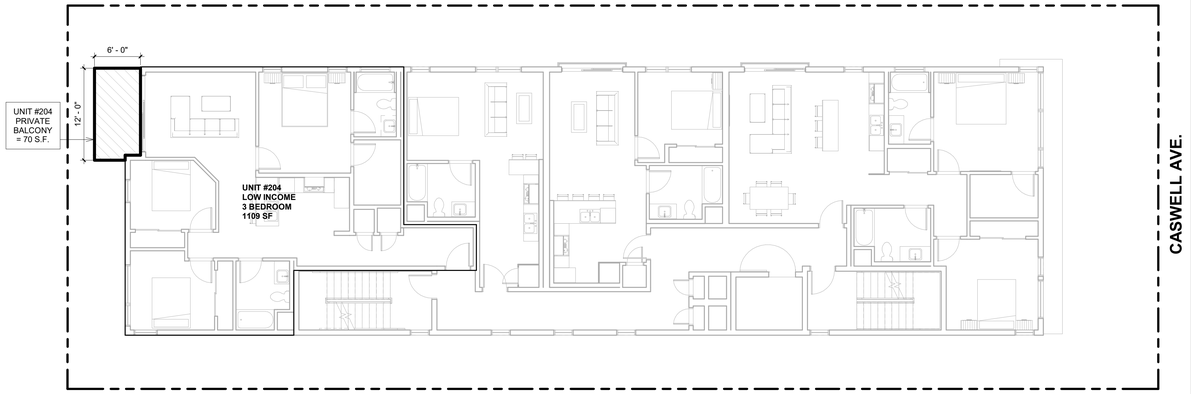

1 1/8" = 1'-0" 2ND-FLOOR - OPEN SPACE

ARCHITECT:
Aaron Brumer & Assoc, Architects
10999 Riverside Drive, Suite 300
North Hollywood, CA 91602
(310) 422-9234
Email - aaron@aaronbrumer.com

SURVEY:
M&G Civil Engineering & Land Surveying
347 S. Robertson Blvd.
Beverly Hills, CA 90211
(310)-659-0871
Email - info@mglandsur.com

LANDSCAPE:
Savage Land Design
680 Langdsorf Dr, Suite 202B
Fullerton, Ca 92831
(714)-878-0335
Email - savagelanddesign@att.net

PROJECT:
14-UNIT MULTIFAMILY DEVELOPMENT
12761 Caswell Ave, Los Angeles, CA 90066

ISSUE	DATE	DESCRIPTION
1	7/30/2021	CITY PLANNING SUBMITTAL

ISSUE	DATE	DESCRIPTION

STAMP
LICENSED ARCHITECT
AARON BRUMER
No. C-30005
REN. 11-30-2021
STATE OF CALIFORNIA

DRAWING TITLE
OPEN SPACE PLAN

A0.4

12761 CASWELL

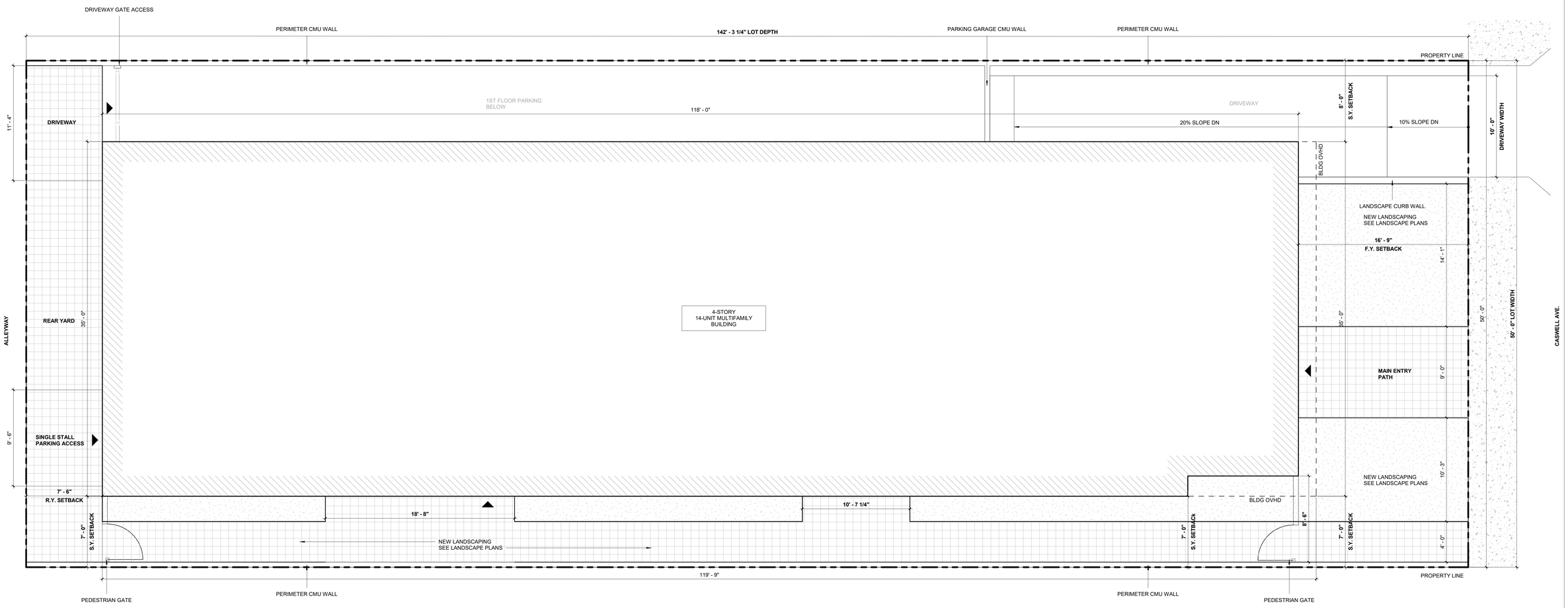

1	SITE PLAN
1/4" = 1'-0"	

ARCHITECT:
Aaron Brumer & Assoc, Architects
10999 Riverside Drive, Suite 300
North Hollywood, CA 91602
(310) 422-9234
Email - aaron@aaronbrumer.com

SURVEY:
M&G Civil Engineering & Land Surveying
347 S. Robertson Blvd.
Beverly Hills, CA 90211
(310)-659-0871
Email - info@mglandsur.com

LANDSCAPE:
Savage Land Design
680 Langdsorf Dr, Suite 202B
Fullerton, Ca 92831
(714)-878-0335
Email - savagelanddesign@att.net

PROJECT:
14-UNIT MULTIFAMILY DEVELOPMENT
12761 Caswell Ave, Los Angeles, CA 90066

ISSUE	DATE	DESCRIPTION
1	7/30/2021	CITY PLANNING SUBMITTAL

ISSUE	DATE	DESCRIPTION

STAMP
LICENSED ARCHITECT
AARON BRUMER
No. C-30005
REN. 11-30-2021
STATE OF CALIFORNIA

DRAWING TITLE
SITE PLAN

A1-00

12761 CASWELL

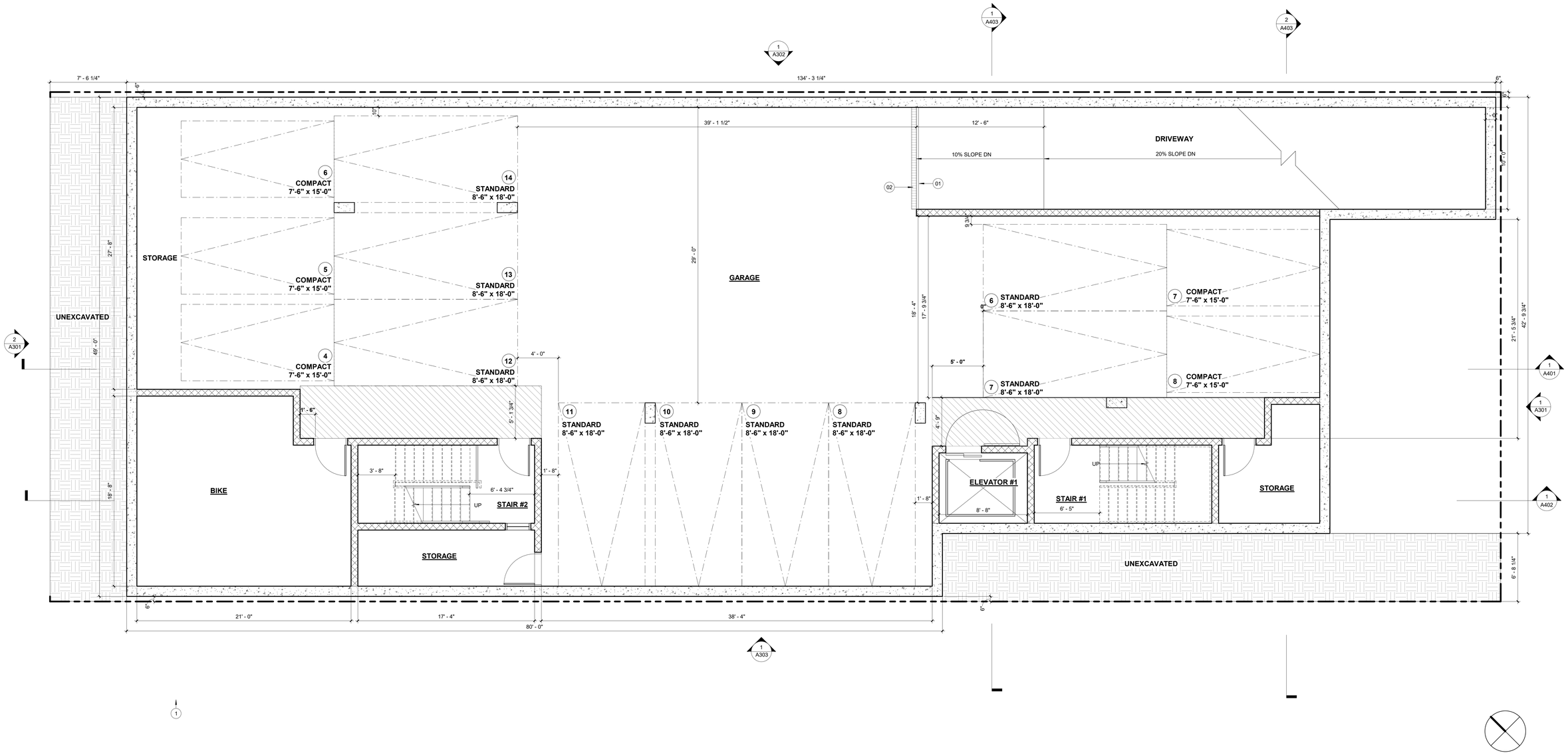

1	00-GARAGE PLAN
1/4" = 1'-0"	

KEYNOTES

01 ROLL UP GARAGE DOOR

02 TRENCH DRAIN

LEGEND

CONCRETE WALL- SEE STRUCTURAL DRAWINGS

8" CMU WALL- SEE STRUCTURAL DRAWINGS

2 X 6 WD STUD WALL- SEE STRUCTURAL DRAWINGS

2 X 4 WD STUD WALL- SEE STRUCTURAL DRAWINGS

2- 2 X 4 WD STUD WALL SEE STRUCTURAL DRAWINGS

1-HR RATED CONSTRUCTION

2-HR RATED CONSTRUCTION

"ENERGY STAR" COMPLIANT EXHAUST FAN CONTROLLED BY HUMIDISTAT; MIN 50 CFM

S SMOKE DETECTOR

CM CARBON MONOXIDE DETECTOR

SHEET NOTES

ARCHITECT:
Aaron Brumer & Assoc, Architects
10999 Riverside Drive, Suite 300
North Hollywood, CA 91602
(310) 422-9234
Email - aaron@aaronbrumer.com

SURVEY:
M&G Civil Engineering & Land Surveying
347 S. Robertson Blvd.
Beverly Hills, CA 90211
(310)-659-0871
Email - info@mglandsur.com

LANDSCAPE:
Savage Land Design
680 Langdsorf Dr, Suite 202B
Fullerton, Ca 92831
(714)-878-0335
Email - savagelanddesign@att.net

PROJECT:

14-UNIT MULTIFAMILY DEVELOPMENT

12761 Caswell Ave, Los Angeles, CA 90066

ISSUE	DATE	DESCRIPTION
1	7/30/2021	CITY PLANNING SUBMITTAL

ISSUE	DATE	DESCRIPTION

STAMP

LICENSED ARCHITECT
AARON BRUMER
No. C-30005
REN. 11-30-2021
STATE OF CALIFORNIA

DRAWING TITLE

GARAGE FLOOR PLAN

A2-00

12761 CASWELL

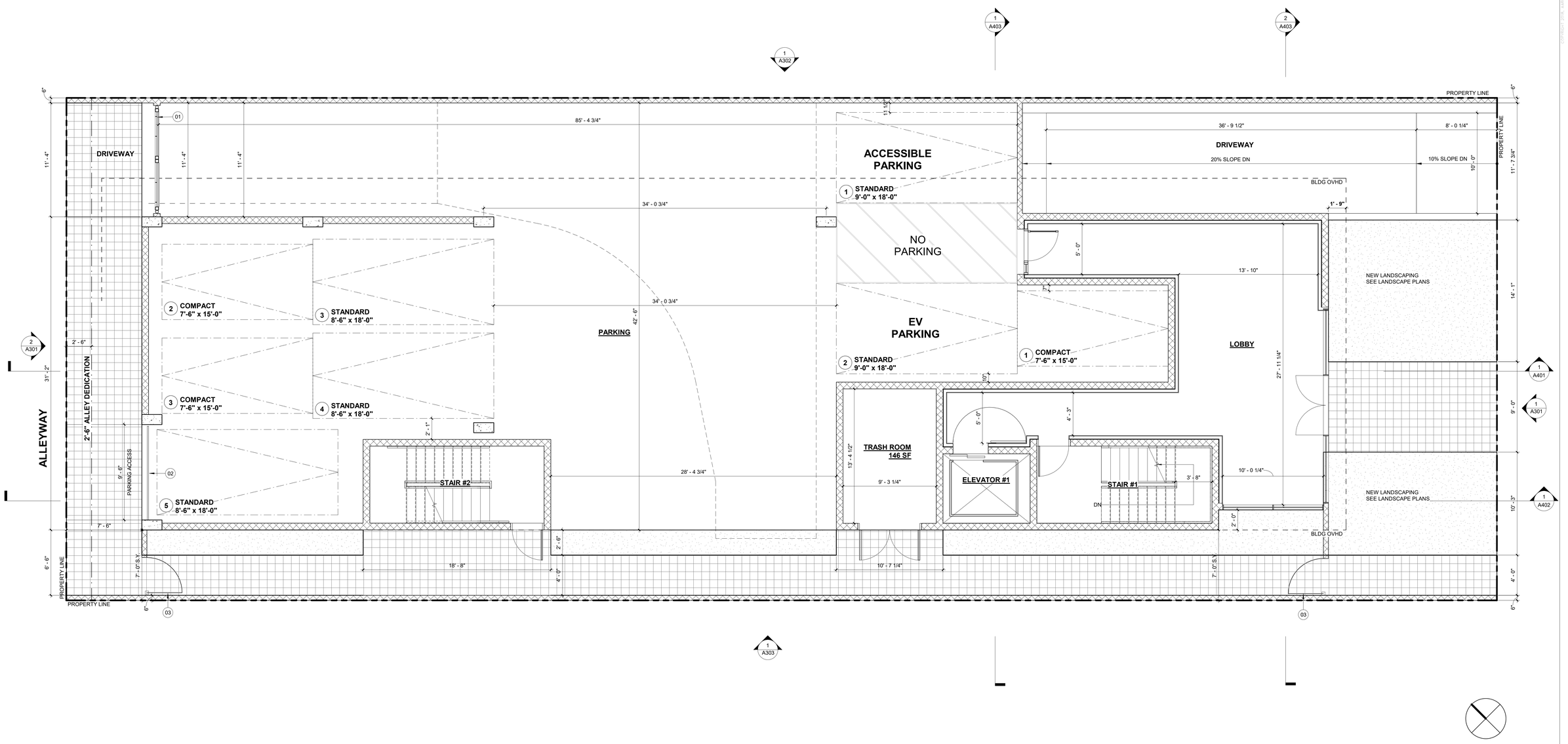

1 1ST- FLOOR PARKING PLAN
1/4" = 1'-0"

KEYNOTES

01 DRIVEWAY GATE
02 ROLL UP GARAGE DOOR
03 PEDESTRIAN GATE

LEGEND

CONCRETE WALL- SEE STRUCTURAL DRAWINGS
8" CMU WALL- SEE STRUCTURAL DRAWINGS
2 X 6 WD STUD WALL- SEE STRUCTURAL DRAWINGS
2 X 4 WD STUD WALL- SEE STRUCTURAL DRAWINGS
2- 2 X 4 WD STUD WALL SEE STRUCTURAL DRAWINGS
1-HR RATED CONSTRUCTION
2-HR RATED CONSTRUCTION
"ENERGY STAR" COMPLIANT EXHAUST FAN CONTROLLED BY HUMIDISTAT; MIN 50 CFM
S SMOKE DETECTOR
CM CARBON MONOXIDE DETECTOR

SHEET NOTES

ARCHITECT:
Aaron Brumer & Assoc, Architects
10999 Riverside Drive, Suite 300
North Hollywood, CA 91602
(310) 422-9234
Email - aaron@aaronbrumer.com

SURVEY:
M&G Civil Engineering & Land Surveying
347 S. Robertson Blvd.
Beverly Hills, CA 90211
(310)-659-0871
Email - info@mglandsur.com

LANDSCAPE:
Savage Land Design
680 Langdsorf Dr, Suite 202B
Fullerton, Ca 92831
(714)-878-0335
Email - savagelanddesign@att.net

PROJECT:
14-UNIT MULTIFAMILY DEVELOPMENT
12761 Caswell Ave, Los Angeles, CA 90066

ISSUE	DATE	DESCRIPTION
1	7/30/2021	CITY PLANNING SUBMITTAL

ISSUE	DATE	DESCRIPTION

STAMP: LICENSED ARCHITECT — AARON BRUMER — No. C-30005 — REN. 11-30-2021 — STATE OF CALIFORNIA

DRAWING TITLE: 1ST FLOOR PLAN

A2-01

12761 CASWELL

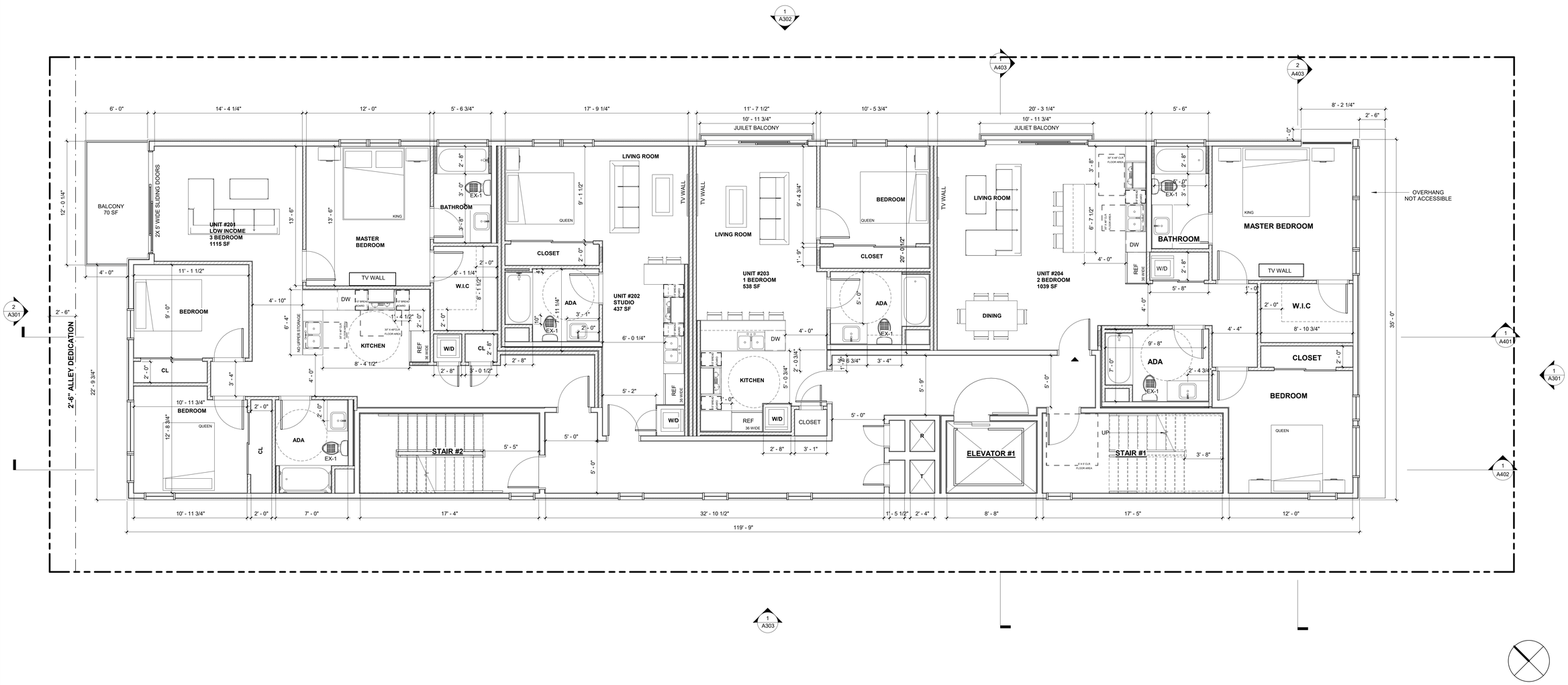

1	2ND-FLOOR PLAN
1/4" = 1'-0"	

KEYNOTES

LEGEND

- CONCRETE WALL- SEE STRUCTURAL DRAWINGS
- 8" CMU WALL- SEE STRUCTURAL DRAWINGS
- 2 X 6 WD STUD WALL- SEE STRUCTURAL DRAWINGS
- 2 X 4 WD STUD WALL- SEE STRUCTURAL DRAWINGS
- 2- 2 X 4 WD STUD WALL SEE STRUCTURAL DRAWINGS
- 1-HR RATED CONSTRUCTION
- 2-HR RATED CONSTRUCTION
- "ENERGY STAR" COMPLIANT EXHAUST FAN CONTROLLED BY HUMIDISTAT; MIN 50 CFM
- (S) SMOKE DETECTOR
- (CM) CARBON MONOXIDE DETECTOR

SHEET NOTES

ARCHITECT:
Aaron Brumer & Assoc, Architects
10999 Riverside Drive, Suite 300
North Hollywood, CA 91602
(310) 422-9234
Email - aaron@aaronbrumer.com

SURVEY:
M&G Civil Engineering & Land Surveying
347 S. Robertson Blvd.
Beverly Hills, CA 90211
(310)-659-0871
Email - info@mglandsur.com

LANDSCAPE:
Savage Land Design
680 Langdsorf Dr, Suite 202B
Fullerton, Ca 92831
(714)-878-0335
Email - savagelanddesign@att.net

PROJECT:
14-UNIT MULTIFAMILY DEVELOPMENT
12761 Caswell Ave, Los Angeles, CA 90066

ISSUE	DATE	DESCRIPTION
1	7/30/2021	CITY PLANNING SUBMITTAL

ISSUE	DATE	DESCRIPTION

STAMP: LICENSED ARCHITECT — AARON BRUMER — No. C-30005 — REN. 11-30-2021 — STATE OF CALIFORNIA

DRAWING TITLE: 2ND FLOOR PLAN

A2-02

12761 CASWELL

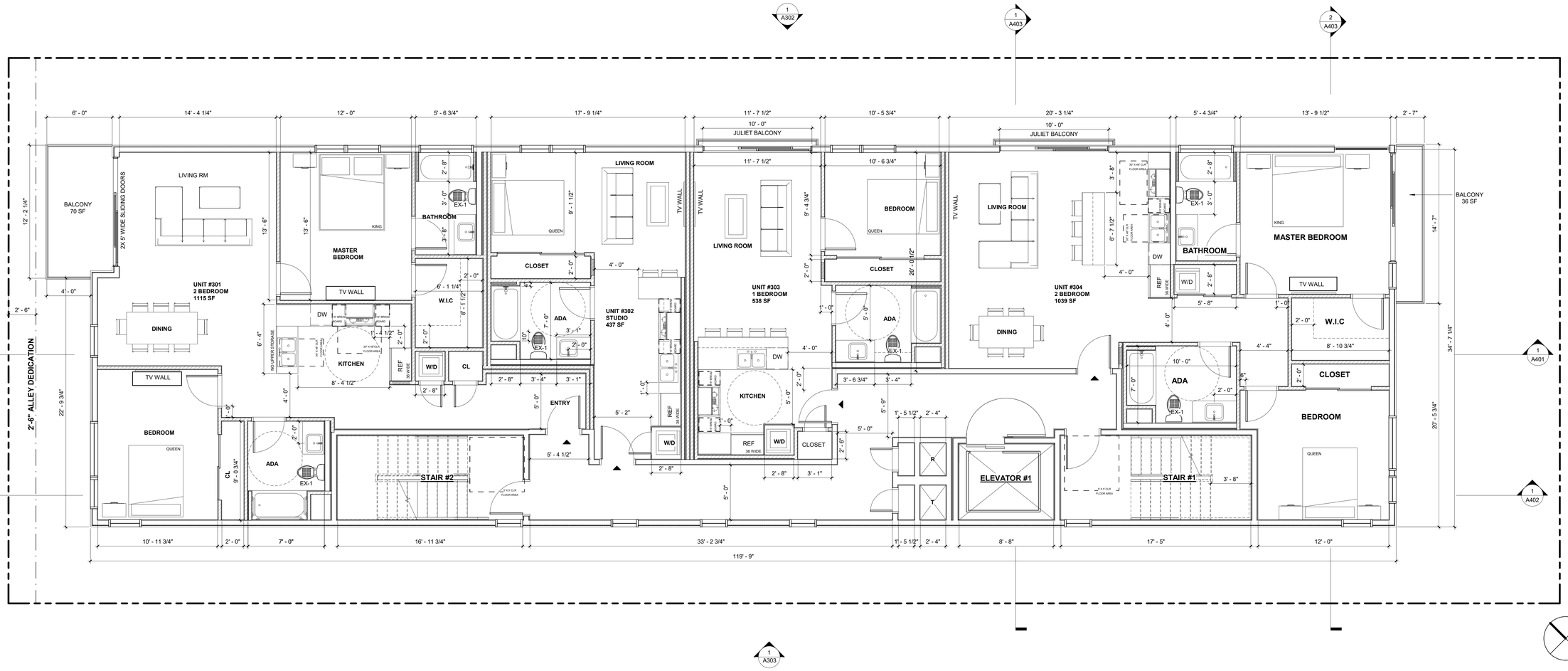

1 3RD-FLOOR PLAN
1/4" = 1'-0"

KEYNOTES

LEGEND

- CONCRETE WALL- SEE STRUCTURAL DRAWINGS
- 8" CMU WALL- SEE STRUCTURAL DRAWINGS
- 2 X 6 WD STUD WALL- SEE STRUCTURAL DRAWINGS
- 2 X 4 WD STUD WALL- SEE STRUCTURAL DRAWINGS
- 2- 2 X 4 WD STUD WALL SEE STRUCTURAL DRAWINGS
- 1-HR RATED CONSTRUCTION
- 2-HR RATED CONSTRUCTION
- "ENERGY STAR" COMPLIANT EXHAUST FAN CONTROLLED BY HUMIDISTAT; MIN 50 CFM
- S SMOKE DETECTOR
- CM CARBON MONOXIDE DETECTOR

SHEET NOTES

ARCHITECT:
Aaron Brumer & Assoc, Architects
10999 Riverside Drive, Suite 300
North Hollywood, CA 91602
(310) 422-9234
Email - aaron@aaronbrumer.com

SURVEY:
M&G Civil Engineering & Land Surveying
347 S. Robertson Blvd.
Beverly Hills, CA 90211
(310)-659-0871
Email - info@mglandsur.com

LANDSCAPE:
Savage Land Design
680 Langdsorf Dr, Suite 202B
Fullerton, Ca 92831
(714)-878-0335
Email - savagelanddesign@att.net

PROJECT:
14-UNIT MULTIFAMILY DEVELOPMENT
12761 Caswell Ave, Los Angeles, CA 90066

ISSUE	DATE	DESCRIPTION
1	7/30/2021	CITY PLANNING SUBMITTAL

ISSUE	DATE	DESCRIPTION

STAMP: LICENSED ARCHITECT — AARON BRUMER — No. C-30005 — REN. 11-30-2021 — STATE OF CALIFORNIA

DRAWING TITLE: 3RD FLOOR PLAN

A2-03

12761 CASWELL

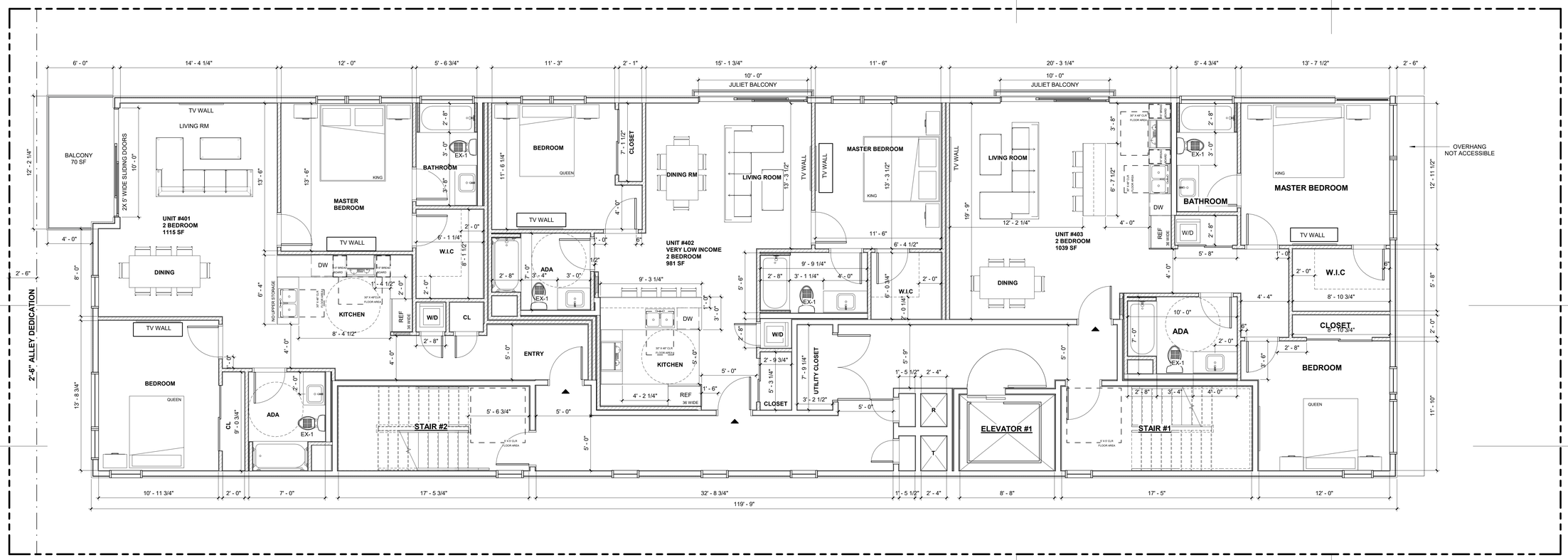

1 4TH-FLOOR PLAN
1/4" = 1'-0"

KEYNOTES

LEGEND

- CONCRETE WALL- SEE STRUCTURAL DRAWINGS
- 8" CMU WALL- SEE STRUCTURAL DRAWINGS
- 2 X 6 WD STUD WALL- SEE STRUCTURAL DRAWINGS
- 2 X 4 WD STUD WALL- SEE STRUCTURAL DRAWINGS
- 2- 2 X 4 WD STUD WALL SEE STRUCTURAL DRAWINGS
- 1-HR RATED CONSTRUCTION
- 2-HR RATED CONSTRUCTION
- "ENERGY STAR" COMPLIANT EXHAUST FAN CONTROLLED BY HUMIDISTAT; MIN 50 CFM
- S SMOKE DETECTOR
- CM CARBON MONOXIDE DETECTOR

SHEET NOTES

ARCHITECT:
Aaron Brumer & Assoc, Architects
10999 Riverside Drive, Suite 300
North Hollywood, CA 91602
(310) 422-9234
Email - aaron@aaronbrumer.com

SURVEY:
M&G Civil Engineering & Land Surveying
347 S. Robertson Blvd.
Beverly Hills, CA 90211
(310)-659-0871
Email - info@mglandsur.com

LANDSCAPE:
Savage Land Design
680 Langdsorf Dr, Suite 202B
Fullerton, Ca 92831
(714)-878-0335
Email - savagelanddesign@att.net

PROJECT:
14-UNIT MULTIFAMILY DEVELOPMENT
12761 Caswell Ave, Los Angeles, CA 90066

ISSUE	DATE	DESCRIPTION
1	7/30/2021	CITY PLANNING SUBMITTAL

ISSUE	DATE	DESCRIPTION

STAMP: LICENSED ARCHITECT — AARON BRUMER — No. C-30005 — REN. 11-30-2021 — STATE OF CALIFORNIA

DRAWING TITLE: 4TH FLOOR PLAN

A2-04

12761 CASWELL

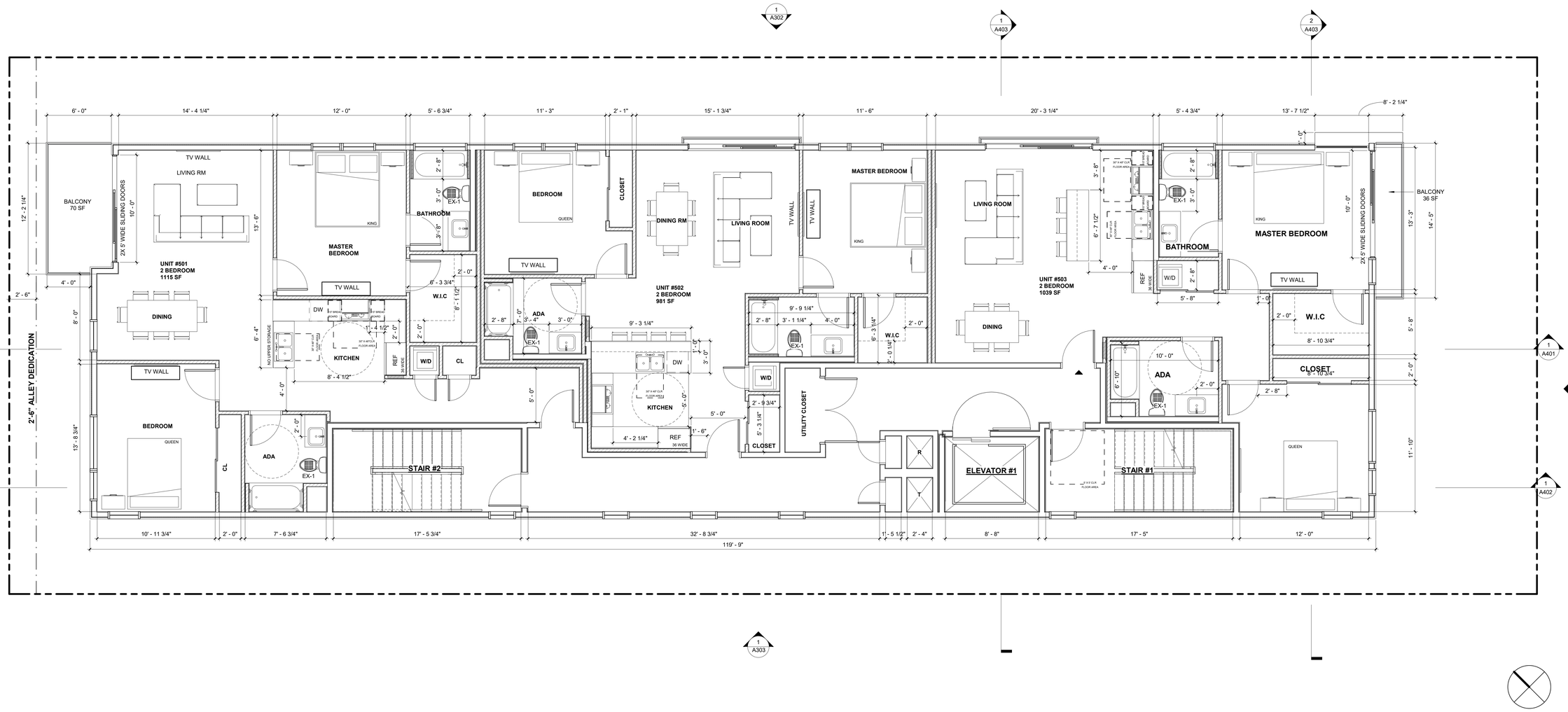

1	5TH-FLOOR PLAN
1/4" = 1'-0"	

KEYNOTES

LEGEND

- CONCRETE WALL- SEE STRUCTURAL DRAWINGS
- 8" CMU WALL- SEE STRUCTURAL DRAWINGS
- 2 X 6 WD STUD WALL- SEE STRUCTURAL DRAWINGS
- 2 X 4 WD STUD WALL- SEE STRUCTURAL DRAWINGS
- 2- 2 X 4 WD STUD WALL SEE STRUCTURAL DRAWINGS
- 1-HR RATED CONSTRUCTION
- 2-HR RATED CONSTRUCTION
- "ENERGY STAR" COMPLIANT EXHAUST FAN CONTROLLED BY HUMIDISTAT; MIN 50 CFM
- (S) SMOKE DETECTOR
- (CM) CARBON MONOXIDE DETECTOR

SHEET NOTES

ARCHITECT:
Aaron Brumer & Assoc, Architects
10999 Riverside Drive, Suite 300
North Hollywood, CA 91602
(310) 422-9234
Email - aaron@aaronbrumer.com

SURVEY:
M&G Civil Engineering & Land Surveying
347 S. Robertson Blvd.
Beverly Hills, CA 90211
(310)-659-0871
Email - info@mglandsur.com

LANDSCAPE:
Savage Land Design
680 Langdsorf Dr, Suite 202B
Fullerton, Ca 92831
(714)-878-0335
Email - savagelanddesign@att.net

PROJECT:
14-UNIT MULTIFAMILY DEVELOPMENT
12761 Caswell Ave, Los Angeles, CA 90066

ISSUE	DATE	DESCRIPTION
1	7/30/2021	CITY PLANNING SUBMITTAL

ISSUE	DATE	DESCRIPTION

STAMP: LICENSED ARCHITECT — AARON BRUMER — No. C-30005 — REN. 11-30-2021 — STATE OF CALIFORNIA

DRAWING TITLE: 5TH FLOOR PLAN

A2-05

12761 CASWELL

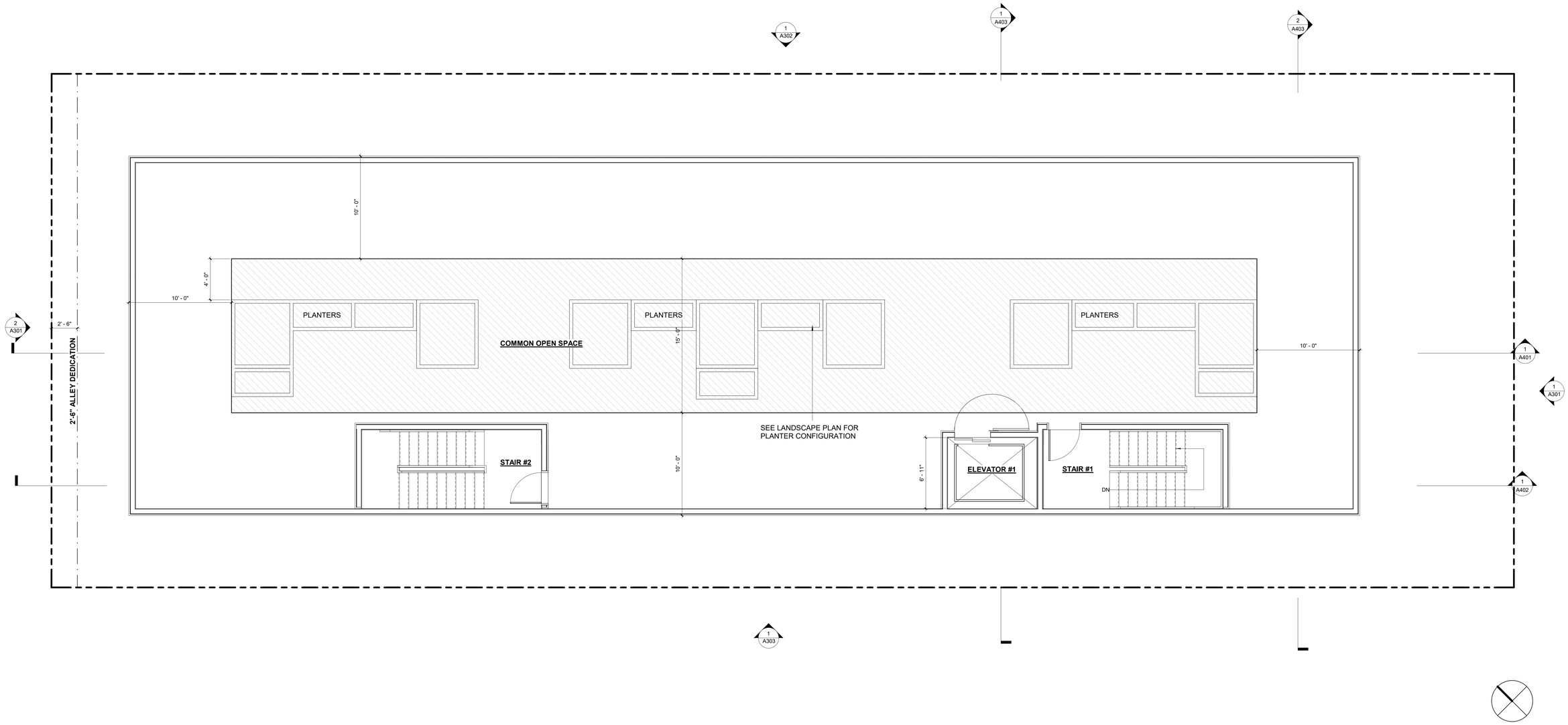

1	ROOF PLAN
1/4" = 1'-0"	

KEYNOTES

LEGEND

- CONCRETE WALL- SEE STRUCTURAL DRAWINGS
- 8" CMU WALL- SEE STRUCTURAL DRAWINGS
- 2 X 6 WD STUD WALL- SEE STRUCTURAL DRAWINGS
- 2 X 4 WD STUD WALL- SEE STRUCTURAL DRAWINGS
- 2- 2 X 4 WD STUD WALL SEE STRUCTURAL DRAWINGS
- 1-HR RATED CONSTRUCTION
- 2-HR RATED CONSTRUCTION
- "ENERGY STAR" COMPLIANT EXHAUST FAN CONTROLLED BY HUMIDISTAT; MIN 50 CFM
- S — SMOKE DETECTOR
- CM — CARBON MONOXIDE DETECTOR

SHEET NOTES

ARCHITECT:
Aaron Brumer & Assoc, Architects
10999 Riverside Drive, Suite 300
North Hollywood, CA 91602
(310) 422-9234
Email - aaron@aaronbrumer.com

SURVEY:
M&G Civil Engineering & Land Surveying
347 S. Robertson Blvd.
Beverly Hills, CA 90211
(310)-659-0871
Email - info@mglandsur.com

LANDSCAPE:
Savage Land Design
680 Langdsorf Dr, Suite 202B
Fullerton, Ca 92831
(714)-878-0335
Email - savagelanddesign@att.net

PROJECT:
14-UNIT MULTIFAMILY DEVELOPMENT
12761 Caswell Ave, Los Angeles, CA 90066

ISSUE	DATE	DESCRIPTION
1	7/30/2021	CITY PLANNING SUBMITTAL

ISSUE	DATE	DESCRIPTION

STAMP
LICENSED ARCHITECT
AARON BRUMER
No. C-30005
REN. 11-30-2021
STATE OF CALIFORNIA

DRAWING TITLE
ROOF PLAN

A2-10

12761 CASWELL

1 EAST EXTERIOR ELEVATION
1/4" = 1'-0"

2 WEST EXTERIOR ELEVATION
1/4" = 1'-0"

ARCHITECT:
Aaron Brumer & Assoc, Architects
10999 Riverside Drive, Suite 300
North Hollywood, CA 91602
(310) 422-9234
Email - aaron@aaronbrumer.com

SURVEY:
M&G Civil Engineering & Land Surveying
347 S. Robertson Blvd.
Beverly Hills, CA 90211
(310)-659-0871
Email - info@mglandsur.com

LANDSCAPE:
Savage Land Design
680 Langdsorf Dr, Suite 202B
Fullerton, Ca 92831
(714)-878-0335
Email - savagelanddesign@att.net

PROJECT:
14-UNIT MULTIFAMILY DEVELOPMENT
12761 Caswell Ave, Los Angeles, CA 90066

ISSUE	DATE	DESCRIPTION
1	7/30/2021	CITY PLANNING SUBMITTAL

ISSUE	DATE	DESCRIPTION

STAMP
LICENSED ARCHITECT
AARON BRUMER
No. C-30005
REN. 11-30-2021
STATE OF CALIFORNIA

DRAWING TITLE
ELEVATIONS

A301

12761 CASWELL

1	NORTH EXTERIOR ELEVATION
1/4" = 1'-0"	

ARCHITECT:
Aaron Brumer & Assoc, Architects
10999 Riverside Drive, Suite 300
North Hollywood, CA 91602
(310) 422-9234
Email - aaron@aaronbrumer.com

SURVEY:
M&G Civil Engineering & Land Surveying
347 S. Robertson Blvd.
Beverly Hills, CA 90211
(310)-659-0871
Email - info@mglandsur.com

LANDSCAPE:
Savage Land Design
680 Langdsorf Dr, Suite 202B
Fullerton, Ca 92831
(714)-878-0335
Email - savagelanddesign@att.net

PROJECT:

14-UNIT MULTIFAMILY DEVELOPMENT

12761 Caswell Ave, Los Angeles, CA 90066

ISSUE	DATE	DESCRIPTION
1	7/30/2021	CITY PLANNING SUBMITTAL

ISSUE	DATE	DESCRIPTION

STAMP

LICENSED ARCHITECT
AARON BRUMER
No. C-30005
REN. 11-30-2021
STATE OF CALIFORNIA

DRAWING TITLE

ELEVATIONS

A302

12761 CASWELL

1	SOUTH EXTERIOR ELEVATION
1/4" = 1'-0"	

ARCHITECT:
Aaron Brumer & Assoc, Architects
10999 Riverside Drive, Suite 300
North Hollywood, CA 91602
(310) 422-9234
Email - aaron@aaronbrumer.com

SURVEY:
M&G Civil Engineering & Land Surveying
347 S. Robertson Blvd.
Beverly Hills, CA 90211
(310)-659-0871
Email - info@mglandsur.com

LANDSCAPE:
Savage Land Design
680 Langdsorf Dr, Suite 202B
Fullerton, Ca 92831
(714)-878-0335
Email - savagelanddesign@att.net

PROJECT:
14-UNIT MULTIFAMILY DEVELOPMENT
12761 Caswell Ave, Los Angeles, CA 90066

ISSUE	DATE	DESCRIPTION
1	7/30/2021	CITY PLANNING SUBMITTAL

ISSUE	DATE	DESCRIPTION

STAMP
LICENSED ARCHITECT
AARON BRUMER
No. C-30005
REN. 11-30-2021
STATE OF CALIFORNIA

DRAWING TITLE
ELEVATIONS

A303

12761 CASWELL

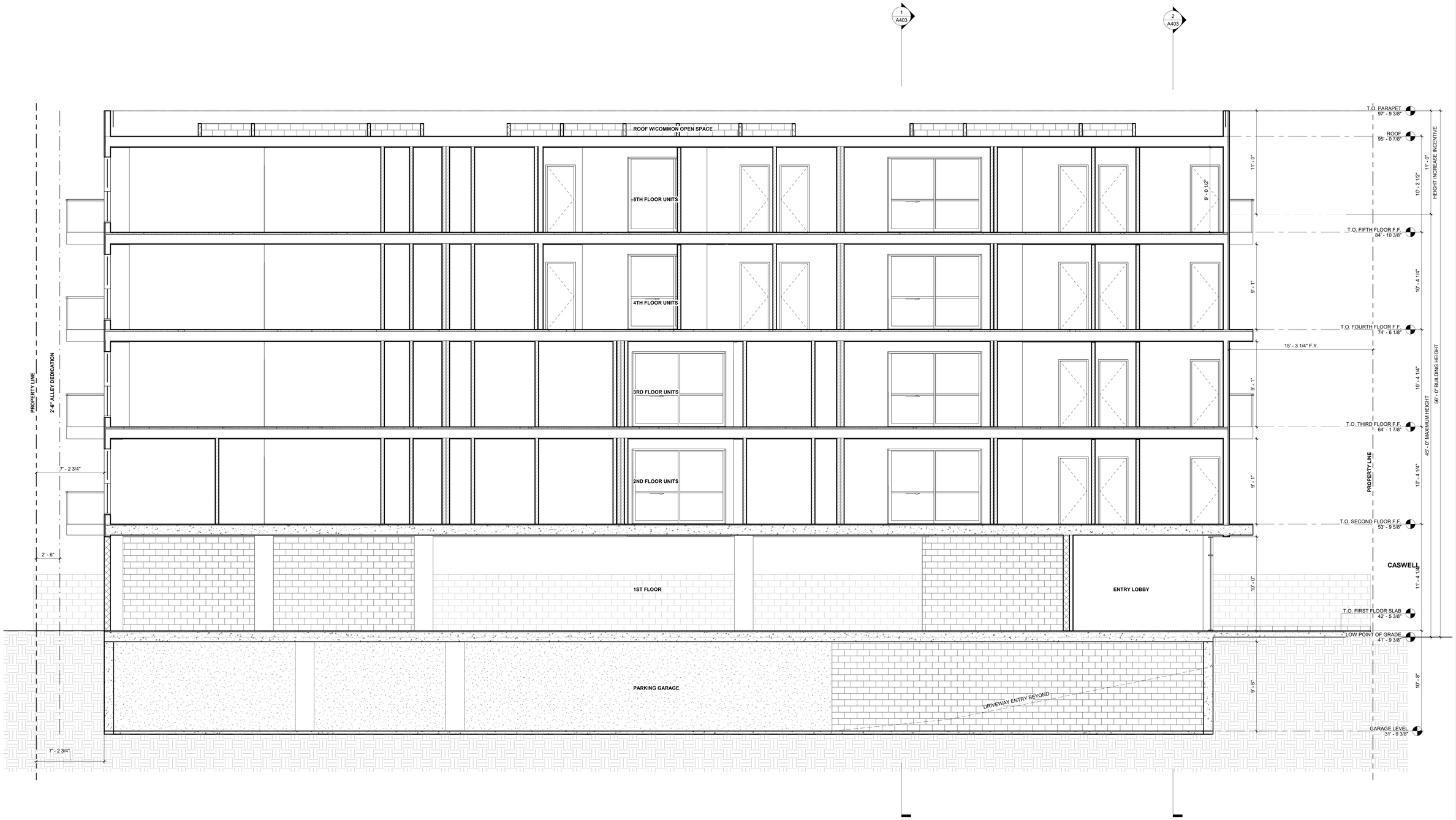

1	LONG SECTION-1
1/4" = 1'-0"	

ARCHITECT:
Aaron Brumer & Assoc, Architects
10999 Riverside Drive, Suite 300
North Hollywood, CA 91602
(310) 422-9234
Email - aaron@aaronbrumer.com

SURVEY:
M&G Civil Engineering & Land Surveying
347 S. Robertson Blvd.
Beverly Hills, CA 90211
(310)-659-0871
Email - info@mglandsur.com

LANDSCAPE:
Savage Land Design
680 Langdsorf Dr, Suite 202B
Fullerton, Ca 92831
(714)-878-0335
Email - savagelanddesign@att.net

PROJECT:
14-UNIT MULTIFAMILY DEVELOPMENT
12761 Caswell Ave, Los Angeles, CA 90066

ISSUE	DATE	DESCRIPTION
1	7/30/2021	CITY PLANNING SUBMITTAL

ISSUE	DATE	DESCRIPTION

STAMP
LICENSED ARCHITECT
AARON BRUMER
No. C-30005
REN. 11-30-2021
STATE OF CALIFORNIA

DRAWING TITLE
LONG SECTION-1

A401

12761 CASWELL

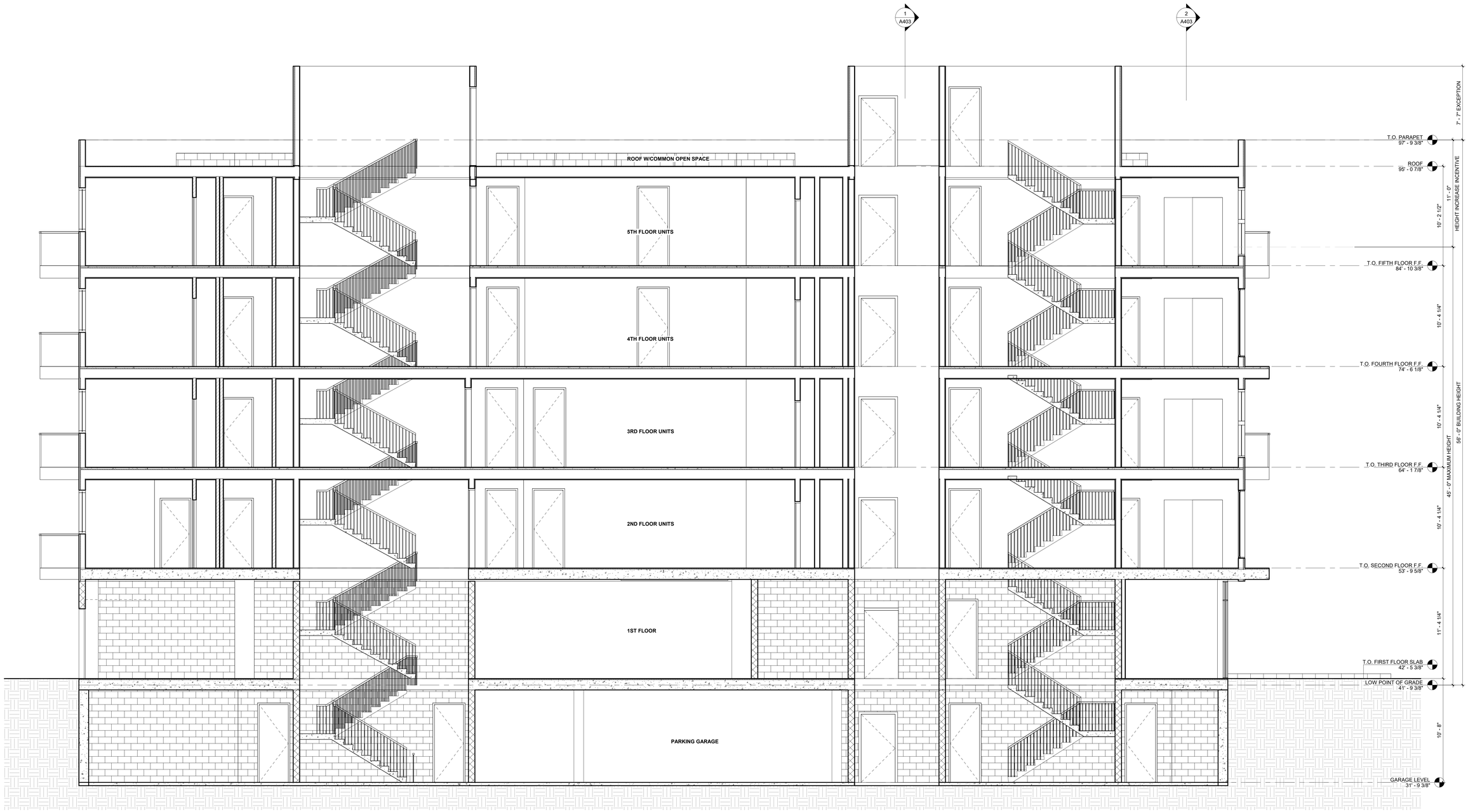

1
1/4" = 1'-0"
LONG SECTION-2

ARCHITECT:
Aaron Brumer & Assoc, Architects
10999 Riverside Drive, Suite 300
North Hollywood, CA 91602
(310) 422-9234
Email - aaron@aaronbrumer.com

SURVEY:
M&G Civil Engineering & Land Surveying
347 S. Robertson Blvd.
Beverly Hills, CA 90211
(310)-659-0871
Email - info@mglandsur.com

LANDSCAPE:
Savage Land Design
680 Langdsorf Dr, Suite 202B
Fullerton, Ca 92831
(714)-878-0335
Email - savagelanddesign@att.net

PROJECT:
14-UNIT MULTIFAMILY DEVELOPMENT
12761 Caswell Ave, Los Angeles, CA 90066

ISSUE	DATE	DESCRIPTION
1	7/30/2021	CITY PLANNING SUBMITTAL

ISSUE	DATE	DESCRIPTION

STAMP
LICENSED ARCHITECT
AARON BRUMER
No. C-30005
REN. 11-30-2021
STATE OF CALIFORNIA

DRAWING TITLE
LONG SECTION-2

A402

12761 CASWELL

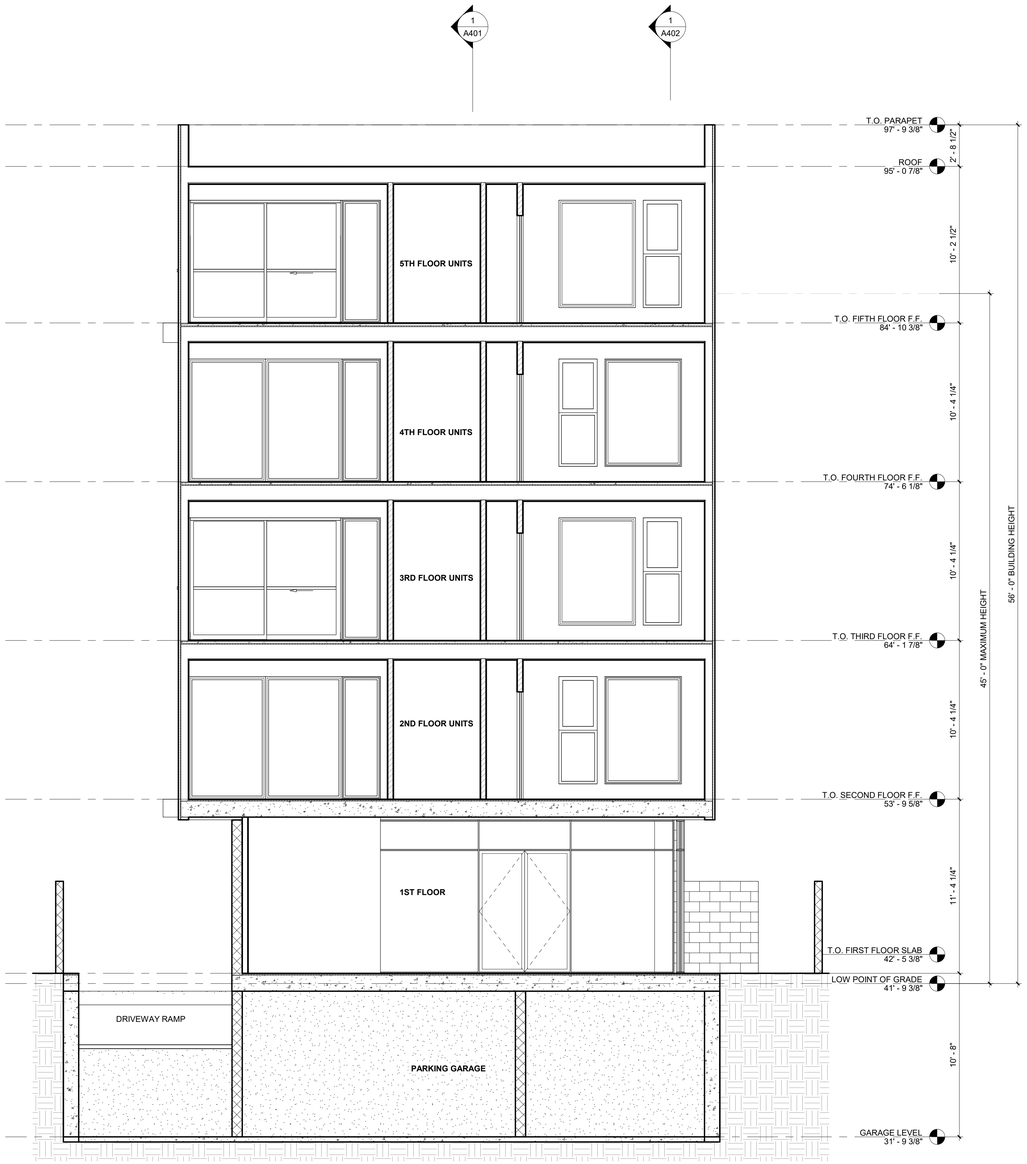

2
1/4" = 1'-0"
SHORT SECTION-1

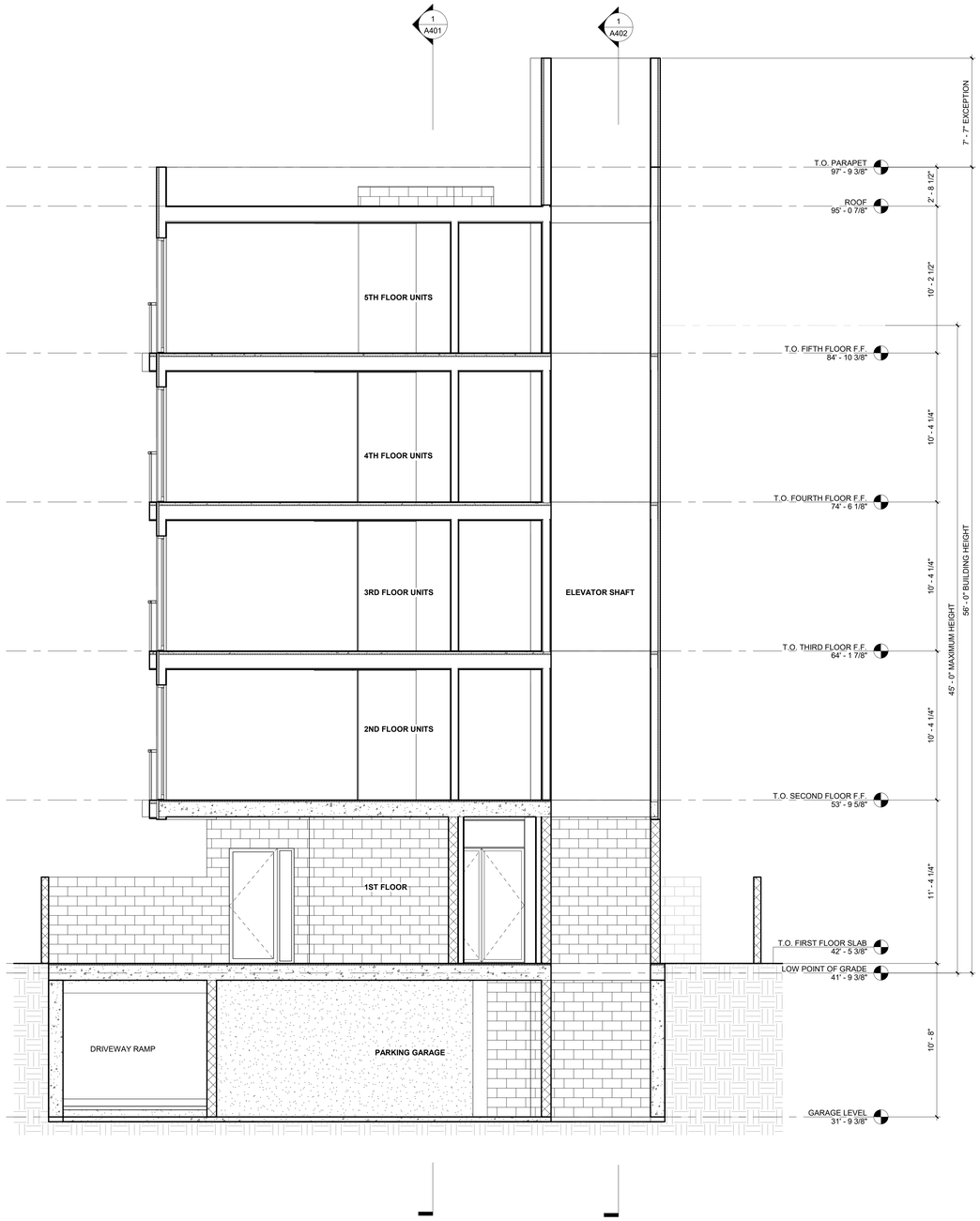

1
1/4" = 1'-0"
SHORT SECTION-2

ARCHITECT:
Aaron Brumer & Assoc, Architects
10999 Riverside Drive, Suite 300
North Hollywood, CA 91602
(310) 422-9234
Email - aaron@aaronbrumer.com

SURVEY:
M&G Civil Engineering & Land Surveying
347 S. Robertson Blvd.
Beverly Hills, CA 90211
(310)-659-0871
Email - info@mglandsur.com

LANDSCAPE:
Savage Land Design
680 Langdsorf Dr, Suite 202B
Fullerton, Ca 92831
(714)-878-0335
Email - savagelanddesign@att.net

PROJECT:
14-UNIT MULTIFAMILY DEVELOPMENT
12761 Caswell Ave, Los Angeles, CA 90066

ISSUE	DATE	DESCRIPTION
1	7/30/2021	CITY PLANNING SUBMITTAL

ISSUE	DATE	DESCRIPTION

STAMP
LICENSED ARCHITECT
AARON BRUMER
No. C-30005
REN. 11-30-2021
STATE OF CALIFORNIA

DRAWING TITLE
SECTION

A403

12761 CASWELL

NEW APARTMENT COMPLEX

12761 CASWELL AVE, LOS ANGELES, CA 90066

LANDSCAPE ARCHITECT

SAVAGE LAND DESIGN
680 LANGSDORF DRIVE, SUITE 202B
FULLERTON, CA 92831

CONTACT: MICHAEL SAVAGE

714-878-0335
SAVAGELANDDESIGN@ATT.NET

VICINITY MAP

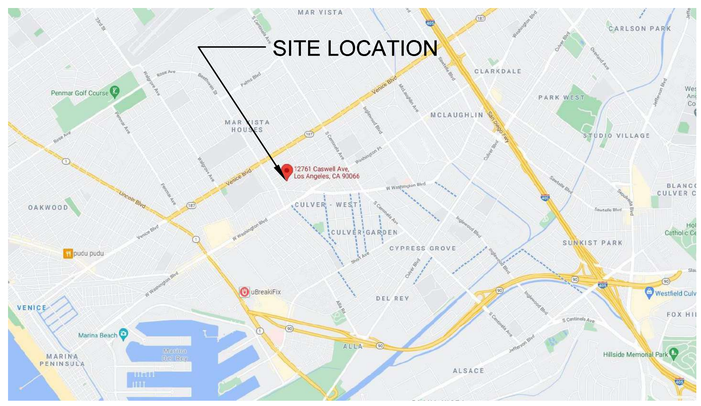

SHEET INDEX

TOTAL LANDSCAPE AREA = 1221 SF

LANDSCAPE POINT SYSTEM

SQUARE FOOTAGE OF SITE	7,585.6 SF
POINTS REQUIRED	15 POINTS
FEATURES/TECHNIQUES	
USE CLASS I OR CLASS II COMPOST PRODUCED USING CITY ORGANIC MATERIALS (TOPGRO) IN A MAJORITY OF LANDSCAPE AREAS	5
MAIN FINISH ELEVATION OF STRUCTURE, AT AN ELEVATION OR ABOVE OR BELOW THE FINISH ELEVATION OF THE SIDEWALK, SUCH THAT A STRAIGHT LINE PERPENDICULAR TO A STRAIGHT STREET OR RADIALLY TO A CURBED STREET, LEADING DIRECTLY TO THE MAIN PEDESTRIAN ENTRANCE OF THE STRUCTURE, IS HANDICAP ACCESSIBLE.	5
VINES OR EXISTING WALL ABUTTING NEW BUFFER	2
BONUS POINTS:	
FREE FLOWERING STREET TREES PLANTS ON WALLS AND FENCES.	5
TOTAL POINTS PROVIDED	17

WATER MANAGEMENT POINT SYSTEM	
SQUARE FOOTAGE OF SITE	7,585.6 SF
POINTS REQUIRED	200 POINTS
POINTS PROVIDED	
DRIP IRRIGATION WITH FLOW CONTROL (5)	25
AUTOMATIC IRRIGATION CONTROLLER	5
PLANTS:	
(A) 60 DIANELLA 'LIL REV'	120
39 ALOE STRIATA	78
35 GAURA LINDHEIMERI 'SISKIYOU PINK'	70
TOTAL POINTS PROVIDED	498

BUILDING = 11,658 SQ FT
LANDSCAPE PROVIDED = 1,221 SQ FT

GENERAL NOTES

1. ALL PROPERTY LINES AND LOT LINES SHALL BE VERIFIED PRIOR TO COMMENCING WORK.
2. ALL DIMENSIONS SHALL BE VERIFIED AGAINST EXISTING CONDITIONS AND ALL DISCREPANCIES REPORTED TO THE OWNER.
3. CONTRACTOR SHALL BE RESPONSIBLE FOR MAKING HIMSELF FAMILIAR WITH ALL UNDERGROUND UTILITIES, PIPES, AND STRUCTURES. CONTRACTOR SHALL TAKE SOLE RESPONSIBILITY FOR COST INCURRED DUE TO DAMAGE AND REPLACEMENT OF SAID UTILITIES.
4. CONTRACTOR SHALL NOT WILLFULLY PROCEED WITH CONSTRUCTION AND/OR GRADE DIFFERENCES WHEN IT IS OBVIOUS THAT UNKNOWN OBSTRUCTIONS EXIST THAT MAY NOT HAVE BEEN KNOWN DURING DESIGN. SUCH CONDITIONS SHALL BE IMMEDIATELY BROUGHT TO THE ATTENTION OF THE OWNER'S REPRESENTATIVE IN WRITING. THE CONTRACTOR SHALL ASSUME FULL RESPONSIBILITY FOR ALL NECESSARY REVISIONS DUE TO FAILURE TO GIVE SUCH NOTIFICATION.
5. A CAL-OSHA PERMIT IS REQUIRED FOR EXCAVATIONS DEEPER THAN 5 FEET AND FOR SHORING AND UNDERPINNING.
6. A LICENSED SURVEYOR SHALL PROVIDE MONITORING OF SHORING AND IMPROVEMENTS ON ADJACENT PROPERTIES AND SUBMIT RESULTS WITH A REPORT TO THE SHORING DESIGN ENGINEER AND TO THE BUILDING INSPECTOR ON A DAILY BASIS DURING EXCAVATION AND SHORING AND ON A WEEKLY BASIS THEREAFTER. WHERE DEWATERING IS REQUIRED, MONITORING SHALL CONTINUE UNTIL DEWATERING IS STOPPED.
7. IN LIEU OF SPECIAL INSPECTION BY THE DEPUTY BUILDING INSPECTOR, THE GEOTECHNICAL ENGINEER SHALL PROVIDE CONTINUOUS INSPECTIONS DURING SHORING AND EXCAVATION OPERATIONSAND DURING REMOVAL OF SHORING.
8. THE CONTRACTOR SHALL NOTIFY ADJACENT PROPERTY OWNERS BY CERTIFIED MAIL 0 DAYS PRIOR TO STARTING THE SHORING AND EXCAVATION WORK

Under ground Service Alert of Southern California
CALL TOLL FREE 1-800-422-4133
TWO WORKING DAYS BEFORE YOU DIG

SAVAGE LAND DESIGN
LANDSCAPE ARCHITECTURE • LAND PLANNING • DESIGN
680 Langsdorf Dr, Suite 202B, Fullerton, CA 92831
P: 714-878-0335
Email: savagelanddesign@att.net

NEW APARTMENT COMPLEX
12761 CASWELL AVE
LOS ANGELES, CA 90066

No.	Revision/Issue

LICENSED LANDSCAPE ARCHITECT
Michael Savage, Lic. No. 4397
Signature
07-30-21
Date
Exp. Date: 7/31/23
STATE OF CALIFORNIA

COVERSHEET

Date 07-30-21	Sheet CS-0
Scale	
Sheet 1 of 9	

GENERAL IRRIGATION NOTES

1. ALL CITY AND STATE LAWS, RULES AND REGULATION GOVERNING OR RELATING TO ANY PORTION OF THIS WORK ARE HEREBY INCORPORATED INTO AND MADE A PART OF THESE SPECIFICATIONS AND THEIR PROVISIONS SHALL BE CARRIED OUT BY THE CONTRACTOR.

2. IT IS THE RESPONSIBILITY OF THE CONTRACTOR TO FAMILIARIZE HIMSELF WITH ALL GRADE DIFFERENCES, LOCATION OF WALLS, RETAINING WALLS, STRUCTURES AND UTILITIES. THE IRRIGATION CONTRACTOR SHALL REPAIR OR REPLACE ALL ITEMS DAMAGED BY HIS WORK AT NO EXPENSE TO THE OWNER. HE SHALL COORDINATE HIS WORK WITH OTHER CONTRACTORS FOR THE LOCATION AND INSTALLATION OF PIPE SLEEVES AND LATERAL LINES THROUGH WALLS, UNDER ROADWAYS, DRIVES, AND PAVING, ETC.

3. THE CONTRACTOR SHALL OBTAIN THE PERTINENT ENGINEERING OR ARCHITECTURAL PLANS BEFORE BEGINNING WORK.

4. THE CONTRACTOR SHALL OBTAIN ALL NECESSARY PERMITS REQUIRED TO PERFORM THE WORK INDICATED HEREIN BEFORE BEGINNING WORK.

5. THIS DESIGN IS DIAGRAMMATIC. ALL PIPING, VALVES, ETC., SHOWN WITHIN PAVED AREAS IS FOR DESIGN CLARIFICATION ONLY AND SHALL BE INSTALLED IN PLANTING AREAS WHEREVER POSSIBLE. THE MAIN LINE PIPE SHALL BE INSTALLED AND ROUTED TO AVOID UNFORESEEN BELOW GRADE CONDITIONS. THE CONTRACTOR SHALL LOCATE ALL VALVES IN SHRUB AREAS UNLESS OTHERWISE DIRECTED BY THE OWNER'S REPRESENTATIVE.

6. THE SPRINKLER SYSTEM DESIGN IS BASED ON THE MINIMUM OPERATING PRESSURE AND THE MAXIMUM FLOW DEMAND SHOWN ON THE IRRIGATION DRAWINGS AT EACH POINT OF CONNECTION. THE IRRIGATION CONTRACTOR SHALL VERIFY WATER PRESSURE PRIOR TO EACH CONSTRUCTION. REPORT ANY DIFFERENCE BETWEEN THE WATER PRESSURE INDICATED ON THE DRAWINGS AND THE ACTUAL PRESSURE READING AT THE IRRIGATION POINT OF CONNECTION OT THE OWNER'S AUTHORIZED REPRESENTATIVE. IN THE EVENT PRESSURE DIFFERENCES ARE NOT REPORTED PRIOR TO THE START OF CONSTRUCTION, THE IRRIGATION CONTRACTOR SHALL ASSUME FULL RESPONSIBILITY FOR ANY REVISION NECESSARY

7. DO NOT WILLFULLY INSTALL THE SPRINKLER SYSTEM AS SHOWN ON THE DRAWINGS WHEN IT IS OBVIOUS IN THE FIELD THAT UNKNOWN OBSTRUCTIONS, GRADE DIFFERENCES OR DIFFERENCES IN THE AREA DIMENSIONS EXIST THAT MIGHT NOT HAVE BEEN CONSIDERED IN THE ENGINEERING. SUCH OBSTRUCTIONS OR DIFFERENCES SHOULD IMMEDIATELY BE BROUGHT TO THE ATTENTION OF THE OWNER'S AUTHORIZED REPRESENTATIVE. IN THE EVENT THIS NOTIFICATION IS NOT PERFORMED, THE IRRIGATION CONTRACTOR SHALL ASSUME FULL RESPONSIBILITY FOR ANY REVISIONS NECESSARY.

8. ALL SPRINKLER HEADS SHALL BE SET PERPENDICULAR TO FINISH GRADE UNLESS OTHERWISE SPECIFIED.

9. THE IRRIGATION CONTRACTOR SHALL FLUSH AND ADJUST ALL SPRINKLER HEADS AND VALVES FOR OPTIMUM COVERAGE AND TO PREVENT OVER SPRAY ONTO WALKS, STREETS, WALLS, ETC. THIS SHALL INCLUDE USE OF RAIN-BIRD PRESSURE COMPENSATING SCREENS "PCS", SELECTING THE BEST DEGREE OF ARC TO FIT THE EXISTING SITE CONDITIONS AND TO THROTTLE THE FLOW CONTROL AT EACH REMOTE CONTROL VALVE TO OBTAIN THE OPTIMUM OPERATING PRESSURE FOR EACH SYSTEM.

10. 120 VAC POWER SOURCE FOR THE CONTROLLER SHALL BE PROVIDED UNDER THE ELECTRICAL SECTION OF THE SPECIFICATIONS. IT SHALL BE THE RESPONSIBILITY OF THE IRRIGATION CONTRACTOR TO COORDINATE ELECTRICAL SERVICE WITH THE GENERAL CONTRACTOR AND SHALL MAKE THE FINAL CONNECTION FORM THE ELECTRICAL SOURCE TO THE CONTROLLER.

11. ALL MAIN LINE PIPING AND CONTROL WIRES UNDER PAVING SHALL BE INSTALLED IN SEPARATE SLEEVES. MAIN LINE SLEEVE SIZE SHALL BE A MINIMUM OF TWICE (2X) THE DIAMETER OF THE PIPE TO BE SLEEVED. CONTROL WIRE SLEEVES SHALL BE OF SUFFICIENT SIZE FOR THE REQUIRED NUMBER OF WIRES UNDER PAVING. IN ADDITION TO THE CONTROL WIRE SLEEVES SHOWN ON THE DRAWINGS, THE IRRIGATION CONTRACTOR SHALL BE RESPONSIBLE FOR THE INSTALLATION OF CONTROL WIRE SLEEVES OF SUFFICIENT SIZE UNDER ALL PAVED AREAS.

12. ALL LATERAL LINE PIPING UNDER PAVING WITHOUT A SLEEVE SHALL BE PVC SCHEDULE 40 PIPE AND SHALL BE INSTALLED PRIOR TO PAVING.

13. PIPE SIZES SHALL CONFORM TO THOSE SHOWN ON THE DRAWINGS NO SUBSTITUTIONS OF SMALLER PIPE SHALL BE PERMITTED BUT SUBSTITUTIONS OF LARGER SIZES MAY BE APPROVED. ALL DAMAGED AND REJECTED PIPE SHALL BE REMOVED FROM THE SITE AT THE TIME OF SAID REJECTION.

14. FINAL LOCATION OF THE AUTOMATIC CONTROLLER LOCATION SHALL BE APPROVED BY THE OWNER'S AUTHORIZED REPRESENTATIVE.

15. ALL POP-UP TYPE SPRINKLER HEADS INSTALLED IN SHRUB AND GROUND COVER AREAS SHALL BE INSTALLED SO THAT THE TOP OF THE SPRINKLER HEAD IS 1-INCH ABOVE FINISH GRADE.

16. ALL POP-UP TYPE SPRINKLER HEADS INSTALLED IN LAWN AREAS SHALL BE INSTALLED SO THAT THE TOP OF THE SPRINKLER HEADS ARE FLUSH WITH ADJACENT SIDEWALK OR CURB.

17. AFTER RECEIVING NOTIFICATION BY THE OWNER'S AUTHORIZED REPRESENTATIVE, THE IRRIGATION CONTRACTOR, WITHIN TEN (10) DAYS SHALL ADJUST ALL LAWN HEADS SO THAT THE TOP OF THE SPRINKLER HEAD IS 1/4-INCH ABOVE FINISH GRADE.

18. ALL EQUIPMENT INSTALLED IN VALVE BOXES SHALL BE INSTALLED PER DETAIL DRAWINGS WITHOUT CUTTING SIDE WALLS OF THE VALVE BOX. CUT VALVE BOXES WILL BE REPLACED WITH NEW VALVE BOXES AS INSPECTED BY THE OWNERS AUTHORIZED REPRESENTATIVE AT THE CONTRACTOR'S OWN EXPENSE.

19. ALL LEAD WIRES SHALL BE #14 GAUGE AND BLACK IN COLOR. ALL COMMON WIRES SHALL BE #14 GUAGE AND WHITE IN COLOR. TWO (2) EXTRA WIRES SHALL BE PROVIDED FOR EACH GROUP OF FIVE (5) VALVES AND LOOPED IN A NEARBY VALVE BOX WITH A 2' MIMIMUM COIL.

20. ALL SPRINKLER EQUIPMENT NOT OTHERWISE DETAILED OR SPECIFIED SHALL BE INSTALLED AS PER MANUFACTURER'S RECOMMENDATIONS AND SPECIFICATIONS.

21. TREE LOCATIONS TAKE PRIORITY OVER IRRIGATION PIPING. STAKE TREE LOCATIONS PRIOR TO TRENCHING FOR PIPE.

22. THE CONTRACTOR SHALL ALLOW FOR AN ASSORTMENT OF VARIABLE ADJUSTABLE NOZZLES (VAN) TO BE INSTALLED IN AREAS WHERE STANDARD PATTERN NOZZLES ARE NOT APPLICABLE.

23. REFER TO SPECIFICATIONS FOR ADDITIONAL DETAILED INFORMATION.

24. "HEAT BRAND" THE TOPS OF THE VALVE BOX LIDS WITH THE APPROPRIATE IDENTIFICATION. REFER TO THE IRRIGATION SPECIFICATIONS.

25. RECIRCULATING WATER SYSTEMS SHALL BE USED FOR WATER FEATURES.

26. A MINIMUM 3-INCH LAYER OF MULCH SHALL BE APPLIED ON ALL EXPOSED SOIL SURFACES OF PLANTING AREAS EXCEPT TURF AREAS, CREEPING OR ROOTING GROUNDCOVERS, OR DIRECT SEEDING APPLICATIONS WHERE MULCH IS CONTRAINDICATED.

27. FOR SOILS LESS THAN 6% ORGANIC MATTER IN THE TOP 6 INCHES OF SOIL, COMPOST AT A RATE OF A MINIMUM OF FOUR CUBIC YARDS PER 1,000 SQUARE FEET OF PERMEABLE AREA SHALL BE INCORPORATED TO A DEPTH OF SIX INCHES INTO THE SOIL.

28. PRESSURE REGULATING DEVICES ARE REQUIRED IF WATER PRESSURE IS BELOW OR EXCEEDS THE RECOMMENDED PRESSURE OF THE SPECIFIED IRRIGATION DEVICES.

29. CHECK VALVES OR ANTI-DRAIN VALVES ARE REQUIRED ON ALL SPRINKLER HEADS WHERE LOW POINT DRAINAGE COULD OCCUR.

30. A DIAGRAM OF THE IRRIGATION PLAN SHOWING HYDROZONES SHALL BE KEPT WITH THE IRRIGATION CONTROLLER FOR SUBSEQUENT MANAGEMENT PURPOSES.

31. A CERTIFICATE OF COMPLETION SHALL BE FILLED OUT AND CERTIFIED BY EITHER THE SIGNER OF THE LANDSCAPE PLANS, THE SIGNER OF THE IRRIGATION PLANS, OR THE LICENSED LANDSCAPE CONTRACTOR FOR THE PROJECT.

32. AN IRRIGATION AUDIT REPORT SHALL BE COMPLETED AT THE TIME OF FINAL INSPECTION.

WATER CONSERVATION STATEMENT

THE SYSTEM IS DESIGNED TO ACHEIVE CONSERVATION AND EFFICIENCY IN WATER USE BY PROVIDING ANTI-DRAIN DEVICES TO PREVENT LOW HEAD DRAINAGE, RAIN SENSOR/ INTERRUPT SWITCH THAT PREVENTS THE SYSTEM FROM ACTIVATING DURING RAIN EVENTS, PRESSURE COMPESATING DEVICES AND LOW VOLUME HEADS TO REDUCE WATER CONSUMPTION.

I HAVE COMPLIED WITH THE CRITERIA OF THE ORDINANCE AND APPLIED THEM FOR EFFICIENT USE OF WATER IN THE LANDSCAPE DESIGN PLANS.

I AGREE WITH THE REQUIREMENTS OF THE WATER EFFICIENT LANDSCAPE ORDINANCE AND SUBMIT A COMPLETE LANDSCAPE DOCUMENTATION PACKAGE

X_____
LANDSCAPE ARCHITECT

		1221	100%

se Plants
ater Use Plants
e Plants

**Irrigation Method
MS = Micro-spray
S = Spray
R = Rotor
B= Bubbler
D= Drip
O = Other

		1221	100%

se Plants
ater Use Plants
e Plants

**Irrigation Method
MS = Micro-spray
S = Spray
R = Rotor

PART 2. CERTIFICATION OF INSTALLATION ACCORDING TO THE LANDSCAPE DOCUMENTATION PACKAGE
"I/we certify that based upon periodic site observations, the work has been substantially completed in accordance with the ordinance and that the landscape planting and irrigation installation conform with the criteria and specifications of the approved Landscape Documentation Package."

Signature*	Date	
Name (print) MICHAEL SAVAGE	Telephone No. 714-878-0335	
	Fax No.	
Title PRESIDENT	Email Address SAVAGELANDDESIGN@ATT.NET	
License No. or Certification No. RLA 4397		
Company SAVAGE LAND DESIGN	Street Address 680 LANGSDORF DR. SUITE 202B	
City FULLERTON	State CALIFORNIA	Zip Code 92831

*Signer of the landscape design plan, signer of the irrigation plan, or a licensed landscape contractor.

PART 3. IRRIGATION SCHEDULING
Attach parameters for setting the irrigation schedule on controller per ordinance Section 492.10.

PART 4. SCHEDULE OF LANDSCAPE AND IRRIGATION MAINTENANCE
Attach schedule of Landscape and Irrigation Maintenance per ordinance Section 492.11.

PART 5. LANDSCAPE IRRIGATION AUDIT REPORT
Attach Landscape Irrigation Audit Report per ordinance Section 492.12.

PART 6. SOIL MANAGEMENT REPORT
Attach soil analysis report, if not previously submitted with the Landscape Documentation Package per ordinance Section 492.5.
Attach documentation verifying implementation of recommendations from soil analysis report per ordinance Section 492.5.

Appendix C – Sample Certificate of Completion.

CERTIFICATE OF COMPLETION
This certificate is filled out by the project applicant upon completion of the landscape project.

PART 1. PROJECT INFORMATION SHEET

Date		
Project Name 12761 CASWELL AVE.		
Name of Project Applicant	Telephone No.	
	Fax No.	
Title	Email Address	
Company	Street Address	
City	State	Zip Code

Project Address and Location:

Street Address 12761 CASWELL AVE.		Parcel, tract or lot number, if available.
City LOS ANGELES		Latitude/Longitude (optional)
State CALIFORNIA	Zip Code 90066	

Property Owner or his/her designee:

Name MICHAEL SAVAGE	Telephone No. 714-878-0335	
	Fax No.	
Title PRESIDENT	Email Address SAVAGELANDDESIGN@ATT.NET	
Company SAVAGE LAND DESIGN	Street Address 680 LANGSDORF DR. SUITE 202B	
City FULLERTON	State CALIFORNIA	Zip Code 92831

Property Owner
"I/we certify that I/we have received copies of all the documents within the Landscape Documentation Package and the Certificate of Completion and that it is our responsibility to see that the project is maintained in accordance with the Landscape and Irrigation Maintenance Schedule."

_____
Property Owner Signature Date

Please answer the questions below:
1. Date the Landscape Documentation Package was submitted to the local agency_____
2. Date the Landscape Documentation Package was approved by the local agency_____
3. Date that a copy of the Water Efficient Landscape Worksheet (including the Water Budget Calculation) was submitted to the local water purveyor_____

IRRIGATION MAINTENANCE SCHEDULE:

1. LANDSCAPES SHALL BE MAINTAINED TO ENSURE WATER EFFICIENCY. A REGULAR MAINTENANCE SCHEDULE SHALL INCLUDE BUT NOT BE LIMITED TO CHECKING, ADJUSTING, AND REPAIRING IRRIGATION EQUIPMENT; RESETTING REPLENISHING MULCH; FERTILIZING; PRUNING; AND WEEDING IN ALL LANDSCAPE AREAS.

2. WHENEVER POSSIBLE, REPAIR OF THE IRRIGATION EQUIPMENT SHALL BE DONE WITH THE ORIGINALLY SPECIFIED MATERIALS OR THEIR EQUIVALENT SPECIFICATION.

IRRIGATION AUDIT SCHEDULE:

1. AT A MINIMUM, AUDITS SHALL BE IN ACCORDANCE WITH THE STATE OF CALIFORNIA LANDSCAPE AUDITOR HANDBOOK.

2. AUDITS SHALL BE CONDUCTED BY A STATE CERTIFIED LANDSCAPE IRRIGATION AUDITOR AT LEAST ONCE EVERY FIVE YEARS AND SUBMITTED TO THE LOCAL WATER PURVEYOR.

SOIL SPECIFICATION / ANALYSIS SAMPLE:

1. PROVIDE SOIL SPECIFICATIONS IF IMPORT SOIL OR PROVIDE SOIL ANALYSIS IF USING ON SITE SOIL. THE SOIL INFORMATION MUST INCLUDE: SOIL TEXTURE (% OF ORGANIC MATTER), INFILTRATION RATE (OR ESTIMATED RANGE), PH & TOTAL SOLUBLE SALTS, INDICATE IF MULCH, SOIL AMENDMENTS OR OTHER MATERIAL WILL BE USED OR REQUIRED.

HOLD HARMLESS AND INDEMNIFICATION CLAUSE

CONTRACTOR AGREES TO ASSUME SOLE RESPONSIBILITY FOR JOB SITE CONDITIONS DURING THE COURSE OF CONSTRUCTION OF THIS PROJECT. INCLUDING SAFETY OF ALL PERSONS AND PROPERTY, AND THAT THIS REQUIREMENT SHALL APPLY CONTINUOUSLY AND NOT BE LIMITED TO NORMAL WORKING HOURS, AND THAT THE CONTRACTOR SHALL DEFEND, INDEMNIFY, AND HOLD THE OWNER/DEVELOPER, COUNTY OF LOCAL JURISDICTION AND THE LANDSCAPE ARCHITECT HARMLESS FROM ANY AND ALL LIABILITY REAL OR ALLEGED, IN CONNECTION WITH THE PERFORMANCE OF WORK ON THIS PROJECT, EXCEPT FOR LIABILITY ARISING FROM THE SOLE NEGLIGENCE OF THE OWNER/DEVELOPER, COUNTY OF LOCAL JURISDICTION, OR THE LANDSCAPE ARCHITECT.

snindemnify

SAVAGE LAND DESIGN
LANDSCAPE ARCHITECTURE • LAND PLANNING • DESIGN
680 Langsdorf Dr, Suite 202B, Fullerton, CA 92831
P: 714-878-0335
Email: savagelanddesign@att.net

NEW APARTMENT COMPLEX
12761 CASWELL AVE
LOS ANGELES, CA 90066

No.	Revision/Issue

LICENSED LANDSCAPE ARCHITECT
Michael Savage, Lic. No. 4397
Signature
07-30-21
Date
Exp. Date: 7/31/23
STATE OF CALIFORNIA

IRRIGATION NOTES AND CALCULATIONS

Date 07-30-21
Scale
Sheet 2 of 9
Sheet LI-1

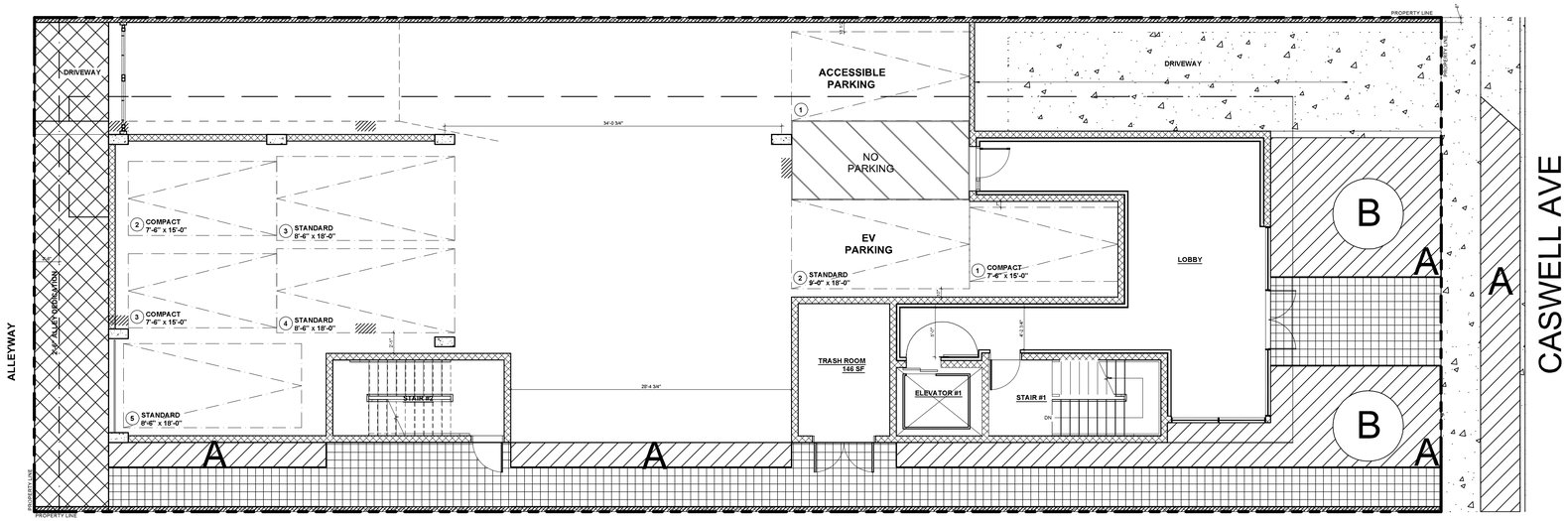

SITE PLAN

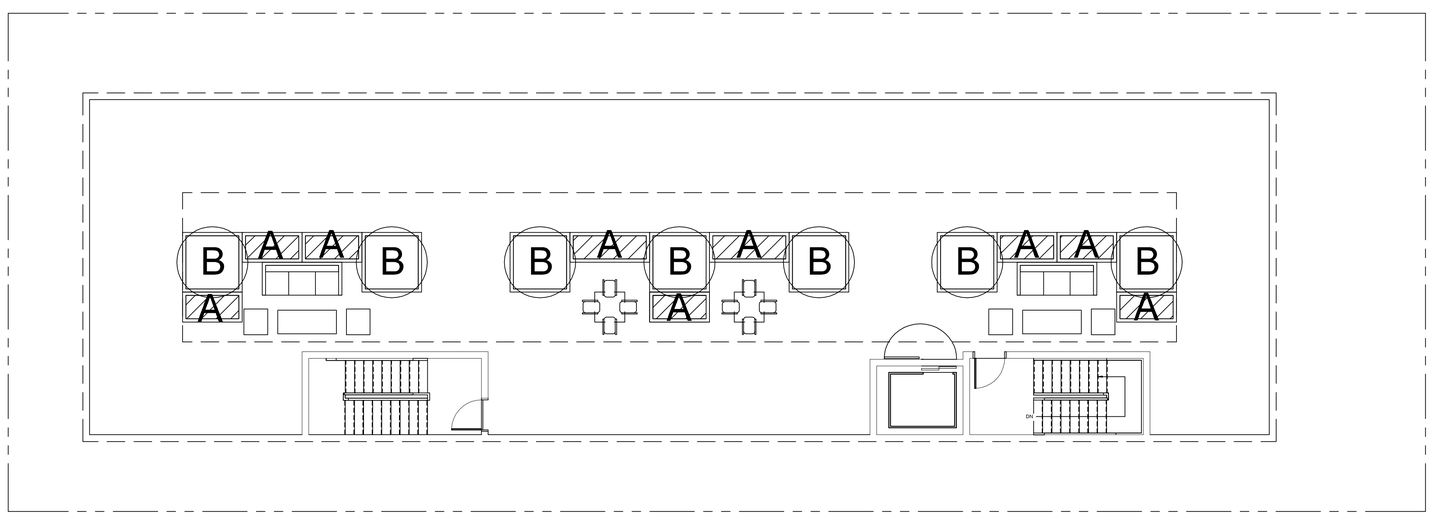

ROOF PLAN

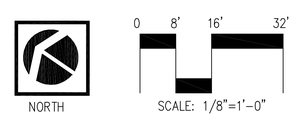

SAVAGE LAND DESIGN
LANDSCAPE ARCHITECTURE • LAND PLANNING • DESIGN
680 Langsdorf Dr, Suite 202B, Fullerton, CA 92831
P: 714-878-0335
Email: savagelanddesign@att.net

NEW APARTMENT COMPLEX
12761 CASWELL AVE
LOS ANGELES, CA 90066

No.	Revision/Issue

LICENSED LANDSCAPE ARCHITECT
Michael Savage, Lic. No. 4397
Signature
07-30-21
Date
Exp. Date: 7/31/23
STATE OF CALIFORNIA

IRRIGATION HYDROZONES

Date 07-30-21
Scale
Sheet 3 of 9
Sheet LI-2

CONTROLLER VALVE CALL-OUT

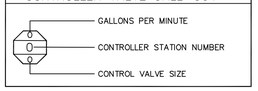

IRRIGATION LEGEND

SYMBOL:	MANUFACTURER:	MODEL NUMBER;	DESCRIPTION:	RAD.:	P.S.I.:	G.P.M.:
●	RAINBIRD	1806-PA80-1402	POP-UP BUBBLER	2'	25	.50
	HUNTER	PLD-06-18	ON SURFACE DRIPLINE – INLET PRESSURE 30 PSI			
	HUNTER	ECO-MAT-17	ON SURFACE DRIPLINE – INLET PRESSURE 30 PSI			
	APPROVED	PVC SCH 40	IRRIGATION SLEEVE (SEE NOTES FOR SIZE)			
	APPROVED	PVC CLASS 200	LATERAL LINE PIPE			
	APPROVED	PVC SCH 40	MAIN LINE PIPE (SIZE PER PLAN)			
	HUNTER	PGV-101G	1" GLOBE VALVE W/ FLOW CONTROL			
	HUNTER	ACZ-101-40	1" ACZ GLOBE VALVE W/ 1" H1100 FILTER SYSTEM			
	HUNTER	PGV 101-ASV	1" ANTI-SIPHON VALVE W/ FLOW CONTROL			
A	HUNTER	CONTROLLER ASSEMBLY.	REFER TO IRRIGATION NOTES FOR INFORMATION			
	NIBCO	T-113-K	ISOLATION GATE VALVE (LINE SIZE)			
DW	NEW	1" DOMESTIC	WATER METER FOR LANDSCAPE USE ONLY			
	FEBCO	825YA	1" REDUCED PRESSURE BACKFLOW ASSEMBLY IN LOCKING ENCLOSURE			
	RAINBIRD	100-PEB	1" MASTER VALVE			
	RAINBIRD	FS100P	FLOW SENSOR			
	NELSON	7642	QUICK COUPLER VALVE (LINE SIZE)			
	FLUSH VALVE ASSEMBLY – SEE DETAIL C, SHEET LI-5					

ALL HUNTER NOZZLES TO BE INSTALLED ON HUNTER PRS40 SERIES POP UP BODIES
ALL TORO NOZZLES TO BE INSTALLED ON TORO 570Z PRX SERIES POP UP BODIES
USE 12" POP UP BODIES FOR SHRUB AREAS AND 6" POP UP BODIES FOR TURF AREAS

IRRIGATION NOTES:

1. DESIGN PRESSURE: 30 PSI
   ACTUAL STATIC PRESSURE: 77/61 PSI
2. CONTRACTOR SHALL PROVIDE BALL VALVE BETWEEN POINT OF CONNECTION AND CONTROL VALVE MANIFOLD. PRESSURIZED MAINLINE FROM POINT OF CONNECTION TO CONTROL VALVE SHALL BE PVC SCHEDULE 80.
3. [A] CONTRACTOR SHALL PROVIDE (1) I-CORE IC-600-SS 6 STATION OUTDOOR CONTROLLER WITH (1) ICM-600 EXPANSION MODULES AND (1) WSS-SEN WIRELESS SOLAR SYNC. INSTALL PER MANUFACTURE'S INSTRUCTIONS.
4. [B] CONTRACTOR SHALL PROVIDE (1) HUNTER PC-400 4-STATION OUTDOOR CONTROLLER. CONTRACTOR SHALL PROVIDE (1) WSS-SEN WIRELESS SOLAR SYNC. INSTALL PER MANUFACTURE'S INSTRUCTIONS.
5. CONTRACTOR SHALL PROVIDE 3/4" COPPER MAIN LINE W/ BALL VALVE
6. FOR ROOF TOP LANDSCAPE ALL LATERAL LINES SHALL BE 3/4" COPPER
7. CONTRACTOR SHALL PROVIDE DRAIN CONNECTIONS FROM PLANTERS TO ROOF DRAIN SYSTEM.

CONSTRUCTION NOTES:

1. THIS PROJECT WILL COMPLY WITH: 2007 CBC, CPC, AND 2007 CEC AND 2008 TITLE 24 ENERGY REGULATIONS AND ALL CITY ORDINANCES.
2. THE HOUSE STREET NUMBER WILL BE VISABLE FROM THE STREET.
3. THE DISCHARGE OF POLLUTANTS TO ANY STORM DRAINAGE SYSTEM IS PROHIBITED. NO SOLID WASTE, PETROLEUM BYPRODUCTS, SOIL PARTICULATES, CONSTRUCTION WASTE MATERIALS, OR WASTE WATER GERNERATED ON CONSTRUCTION SITES OR BY CONSTRUCTION ACTIVITIES SHALL BE PLACED CONVEYED OR DISCHARGED INTO THE STREET, GUTTER, OR STORM DRAIN SYSTEMS.

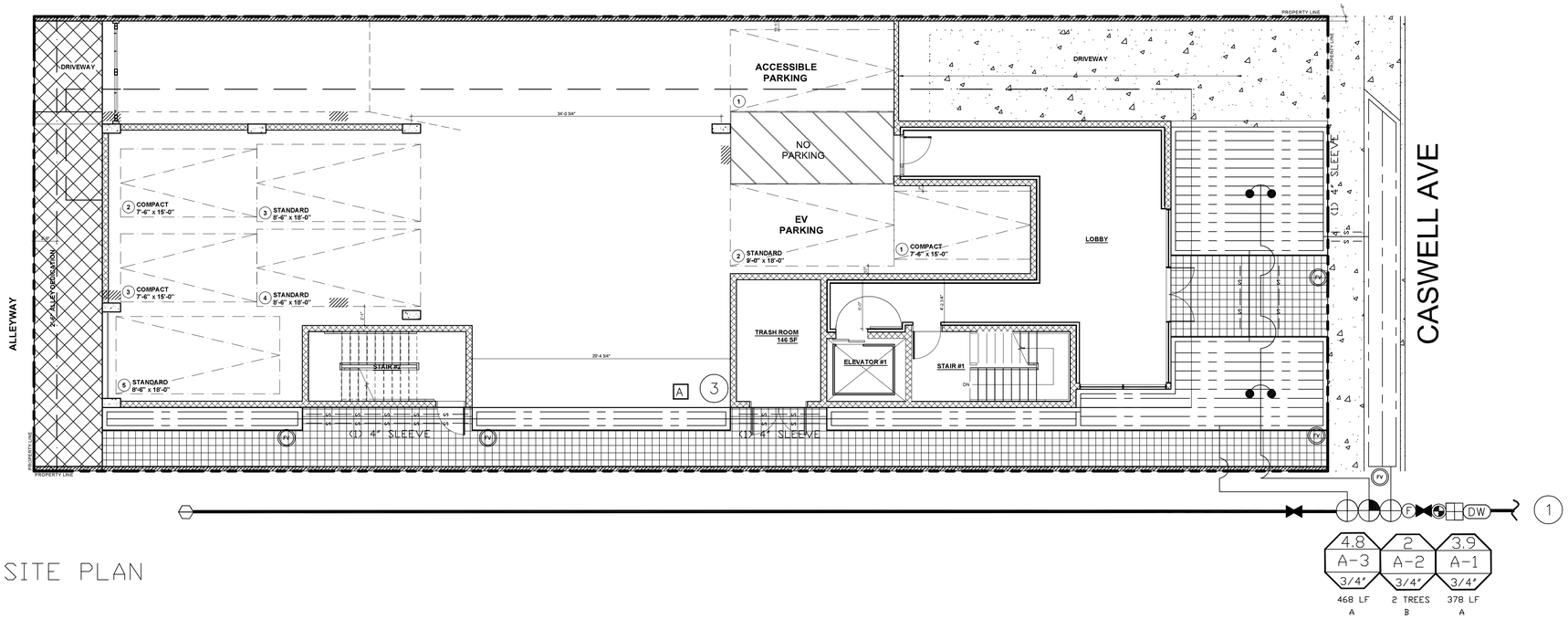

SITE PLAN

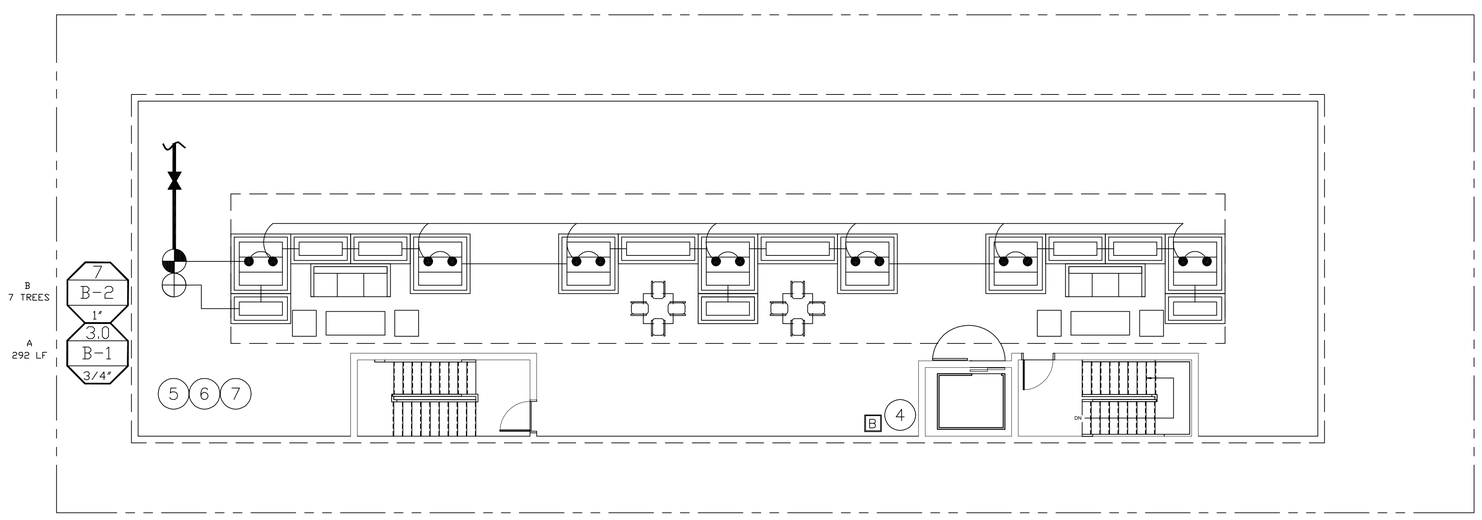

ROOF PLAN

NORTH

SCALE: 1/8"=1'-0"

SAVAGE LAND DESIGN
LANDSCAPE ARCHITECTURE•LAND PLANNING•DESIGN
680 Langsdorf Dr, Suite 202B, Fullerton, CA 92831
P: 714-878-0335
Email: savagelanddesign@att.net

NEW APARTMENT COMPLEX
12761 CASWELL AVE
LOS ANGELES, CA 90066

No.	Revision/Issue

LICENSED LANDSCAPE ARCHITECT
Michael Savage, Lic. No. 4397
Signature
07-30-21
Date
Exp. Date 7/31/23
STATE OF CALIFORNIA

IRRIGATION LAYOUT PLAN

Date 07-30-21
Scale
Sheet 4 of 9
Sheet LI-3

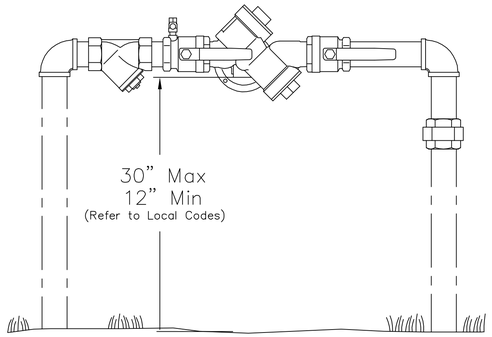

Reduced Pressure Assembly
Outside Installation

FEBCO MODEL 825Y | J

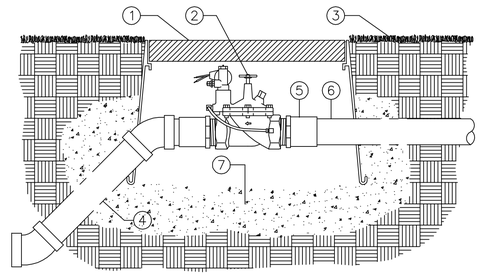

1. RECTANGULAR PLANSTIC VALVE BOX GREEN IN COLOR WITH PURPLE RECYCLED LABEL ON LID
2. ELECTRIC REMOTE CONTROL VALVE
3. FINISH GRADE
4. PRESSURE SUPPLY LINE
5. PVC MALE ADAPTOR (2 REQUIRED)
6. PVC PRESSURE SUPPLY LINE FROM BASKET STRAINER
7. 3/4" CRUSHED ROCK SUMP (ONE CUBIC FOOT)

NOTE: VALVE SHALL HAVE A MINIMUM OF 4" CLEARANCE FROM THE BOTTOM OF THE VLAVE BOX LID, AND 2" MINUMUM CLEARANCE FROM THE BOTTOM OF VALVE AND TOP OF GRAVEL SUMP.

NOTE: ALL PIPE AND FITTINGS USED WITH RECYCLED WATER SHALL BE PURPLE IN COLOR.

MASTER VALVE | G

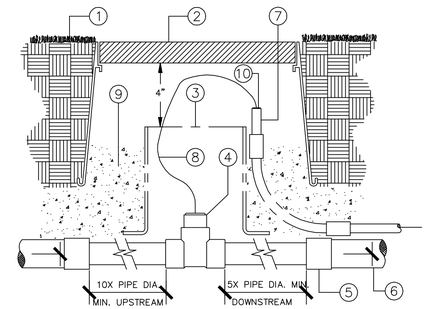

1. FINISH GRADE
2. RECTANGULAR VALVE BOX
3. 8" DIA. CL 160 PVC SLEEVE BOTTOM TO BE FLARED AND CONTACT TOP OF PRESSURE SUPPLY LINE
4. FLOW SENSOR, REFER TO PLANS FOR MODEL NUMBER AND SIZE
5. PVC REDUCING COUPLER (2 REQUIRED)
6. PVC PRESSURE SUPPLY LINE
7. 3/4" ELECTRICAL CONDUIT
8. BELDEN #9889 CABLE FROM SENSOR LEADS TO DATA DECODER, REFER TO PLANS FOR LOCATION
9. 3/4" GRAVEL SUMP 1 CU. FT.
10. CONDUIT BUSHING

FLOW SENSOR | D

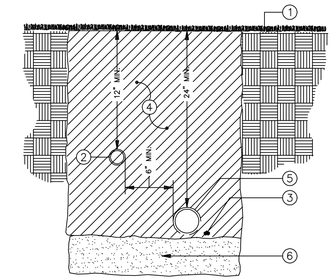

1. FINISH GRADE
2. LATERAL LINE
3. CONTROL WIRES
4. CLEAN BACKFILL (REFER TO SPECIFICATIONS)
5. PRESSURE SUPPLY LINE
6. SAND BEDDING (REFER TO SPECIFICATIONS)

INSTALL ALL CONTROL WIRE ON THE UNDERSIED OF THE PRESSURE SUPPLY LINE

TRENCHING IN LANDSCAPE AREAS | A

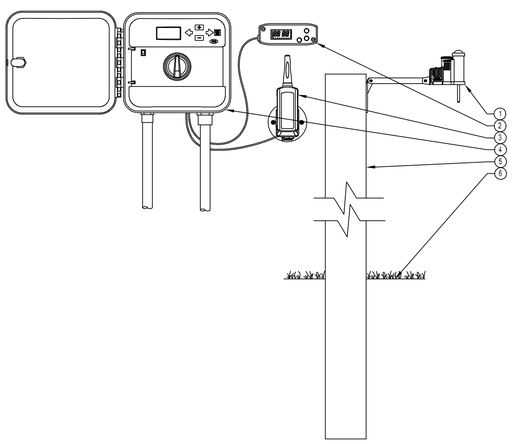

LEGEND:
1. SOLAR SYNC WIRELESS SENSOR
2. SOLAR SYNC MODULE
3. SOLAR SYNC WIRELESS RECEIVER
4. SOLAR SYNC COMPATIBLE CONTROLLER
5. POST OR SUITABLE MOUNTING SURFACE
6. FINISHED GRADE

WIRELESS SOLAR SYCN | H

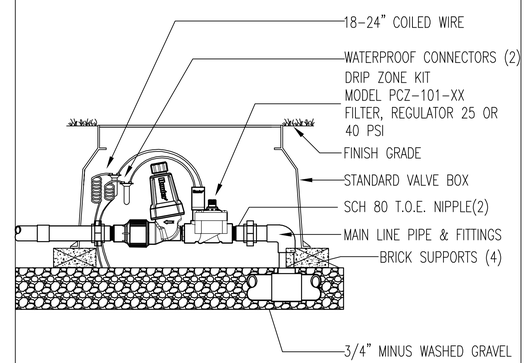

CONTROL VALVE ASSEMBLY (DRIP) | E

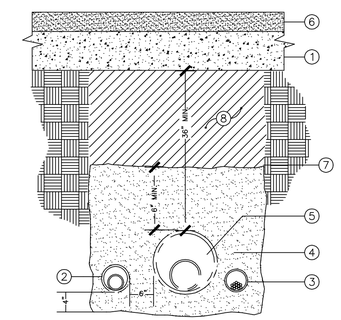

1. SUBGRADE
2. LATERAL LINE (IN SLEEVE)
3. CONTROL WIRES (IN CONDUIT)
4. CLEAN GRANITE SAND
5. PRESSURE SUPPLY LINE (IN SLEEVE)
6. FINISH SURFACE
7. SOIL SEPARATOR
8. 90% CLEAN BACK-FILL

TRENCHING UNDER HARDSCAPE | B

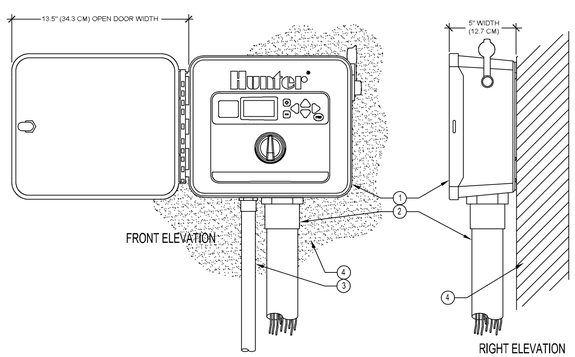

LEGEND:
1. IRRIGATION CONTROLLER (I CORE) PER PLAN
2. IRRIGATION CONTROL WIRE IN CONDUIT SIZE AND TYPE PER LOCAL CODES
3. ELECTRICAL SUPPLY CONDUIT CONNECT TO POWER SOURCE, J-BOX INSIDE CONTROLLER
4. ADJACENT SURFACE TO MOUNT CONTROLLER PER PLAN

NOTE
MOUNT CONTROLLER LCD SCREEN AT EYE LEVEL
CONTROLLER SHALL BE HARD-WIRED TO GROUNDED 110 VAC POWER SOURCE

IRRIGATION CONTROLLER AND SENSOR – WALL MOUNT | I

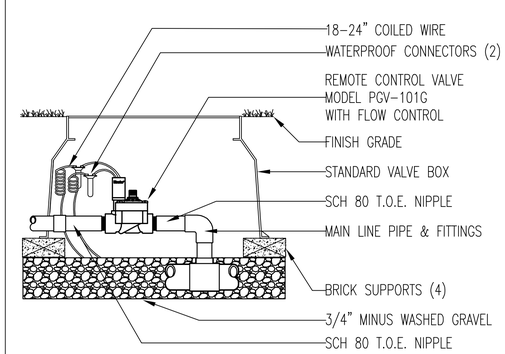

CONTROL VALVE ASSEMBLY | F

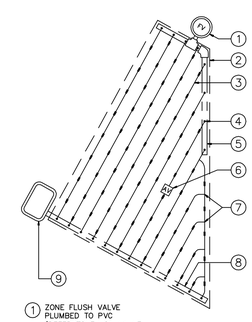

1. ZONE FLUSH VALVE PLUMBED TO PVC (REFER TO FLUSH VALVE ASSEMBLY)
2. AREA PERIMETER
3. NETAFIM IRRIGATION TUBING, SEE IRRIGATION LEGEND FOR EMITTER SPACING
4. MANIFOLD CONNECTION (PVC TO ELBOW)
5. PVC FLUSH MANIFOLD
6. AIR/VACUUM RELIEF VALVE (PLUMED TO GEOFLOW TUBING AT EACH HIGH POINT)
7. COMPRESSION TEE
8. PVC SUPPLY MANIFOLD
9. REMOTE CONTROL VALVE (REFER TO DRIP VALVE ASSEMBLY DETAIL)

INLINE DRIP TUBING LAYOUT | C

SAVAGE LAND DESIGN
LANDSCAPE ARCHITECTURE • LAND PLANNING • DESIGN
680 Langsdorf Dr, Suite 202B, Fullerton, CA 92831
P: 714-878-0335
Email: savagelanddesign@att.net

NEW APARTMENT COMPLEX
12761 CASWELL AVE
LOS ANGELES, CA 90066

No.	Revision/Issue

LICENSED LANDSCAPE ARCHITECT
Michael Savage, Lic. No. 4397
Signature
07-30-21
Date
Exp. Date 7/31/23
STATE OF CALIFORNIA

IRRIGATION DETAILS

Date 07-30-21
Scale
Sheet 6 of 9
Sheet LI-4

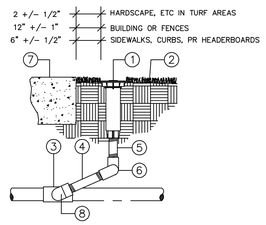

1. POP-UP SPRAY HEAD INSTALL 6" FROM EDGE OF HARDSCAPE
2. FINISH GRADE
3. TEE IN LATERAL LINE PIPE
4. 1/2" X 2" SCH. 80 PVC NIPPLE
5. 1/2" X 8" SCH. 80 PVC NIPPLE
6. 1/2" MIP X FIP SCH. 40,90 ELL (2 REQUIRED)
7. HARDSCAPE
8. PVC SCH. 40 STREET ELL

POP UP SPRAY HEAD | I

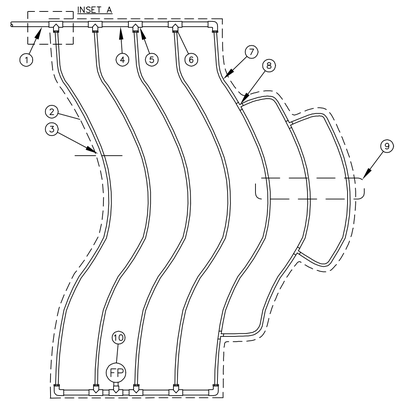

1. PVC SUPPLY PIPE FROM CONTROL VALVE (SIZEPER PLAN)
2. PERIMETER IF IRRIGATED AREA.
3. PERIMETER DRIPLINE PIPE TO BE INSTALLED 2"-4" FROM PERIMETER OF AREA
4. PVC SUPPLY MANIFOLD
5. PVC SCH 40 TEE OR EL (TYPICAL)
6. BARB X MALE FITTING:
7. ON-SURFACE DRIPLINE:
8. BARB X BARB INSERT TEE:
9. TOTAL LENGTH OF SELECTED DRIPLINE SHOULD NOT EXCEED LENGTH SHOWN IN TABLE
10. FLUSH VALVE LOCATION
11. PVC RISER PIPE
12. 2"-3" DEPTH OF MULCH
13. FINISH GRADE

NOTES:
1. DISTANCE BETWEEN LATERAL ROWS AND EMITTER SPACING TO BE BASED ON SOIL TYPE, PLANT MATERIALS AND CHANGES IN ELEVATION. SEE INSTALLATION SPECIFICATIONS ON RAIN BIRD WEB SITE (WWW.RAINBIRD.COM) FOR SUGGESTED SPACING.
2. LENGTH OF LONGEST DRIPLINE LATERAL SHOULD NOT EXCEED THE MAXIMUM SPACING SHOWN IN THE ACCOMPANYING TABLE.
3. PLACE TIE DOWN STAKES EVERY THREE FEET IN SAND, FOUR FEET IN LOAM, AND FIVE FEET IN CLAY.
4. AT FITTINGS WHERE THERE IS A CHANGE OF DIRECTION SUCH AS TEES OR ELBOWS, USE TIE-DOWN STAKES ON EACH LEG OF THE CHANGE OF DIRECTION.
5. WHEN USING 17MM INSERT FITTINGS WITH DESIGN PRESSURE OVER 50PSI, IT IS RECOMMENDED THAT STAINLESS STEEL CLAMPS BE INSTALLED ON EACH FITTING.

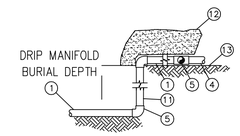

INLINE DRIP TUBING ON GRADE– CURVED LAYOUTS | D

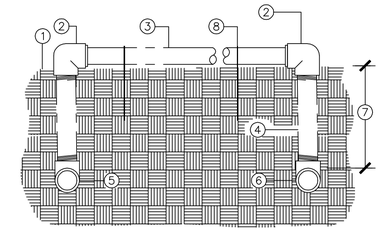

1. FINISH GRADE
2. THREAD X COMPERSSION ELBOW
3. SUBSURFACE TUBING, INSTALL ON GRADE AND STAKE AT 2' O.C. USING SALCO DTS-30-750 TUBING STAKES.
4. 10" THREADED PVC SCH. 40 RISER
5. PVC SCH. 40 TEE (S X S X T) IN EXHAUST HEADER TO FLUSH VALVE ASSEMBLY
6. PVC SCH. 40 TEE (S X S X T) IN INTAKE HEADER
7. HEADER DEPTH REFER TO SPECIFICATIONS
8. SALCO DTS-30-750 TUBING STAKES

INLINE DRIP TUBING ON GRADE | A

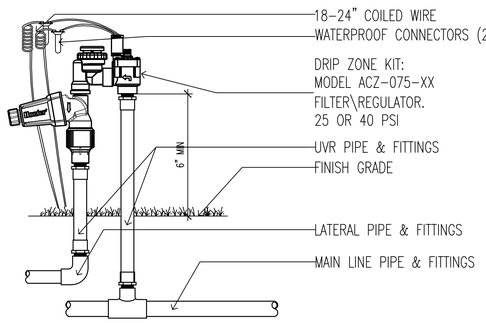

NOTE
ANTI-SIPHON VALVES SHOULD BE INSTALLED 6-12" ABOVE THE HIGHEST SPRINKLER HEAD WITHIN THE ZONE, OR, ACCORDING TO LOCAL CODE.

XX ACZ-075 VALVE
SCALE: 1.5" = 1'-0" Hunter IRRIGATION DETAIL

CONTROL VALVE ASSEMBLY (DRIP) | J

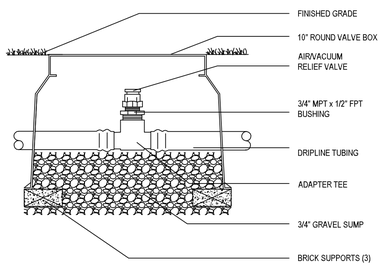

NOTES:
1. INSTALLATION TO BE COMPLETED IN ACCORDANCE WITH MANUFACTURER'S SPECIFICATIONS.
2. DO NOT SCALE DRAWINGS.
3. ALL DIMENSIONS ARE CONSIDERED TRUE AND REFLECT MANUFACTURER'S SPECIFICATIONS.
4. CONTRACTOR'S NOTE: FOR PRODUCT AND COMPANY INFORMATION VISIT www.CADdetails.com/info REFERENCE NUMBER 901-342.

DRIP MICRO
AIR RELIEF TUBING

AIR RELIEF TUBING | G

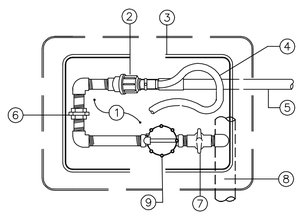

1. 3/4" CRUSHED GRAVEL SUMP 2 CUBIC FEET (INSTALL SOIL SEPARATOR FABRIC OVER SUMP)
2. AGRICULTURAL PRODUCTS INC. MODEL 4E-3/4-FILTER WITH 150 MESH SCREEN
3. RECTANGULAR VALVE BOX, GREEN IN COLOR. BRAND LID WITH CONTROLLER AND STATION NUMBER. VALVE BOX TO REST ON GRAVEL SUMP
4. 18" X 12" DIA. FLEX HOSE- CONNECT TO FILTER FLUSH PORT
5. PVC LATERAL LINE PIPE
6. PVC UNION (LINE SIZE)
7. PVC BALL VALVE (LINE SIZE)
8. PRESSURE SUPPLY LINE
9. ELECTRIC REMOTE CONTROL VALVE

DRIP VALVE ASSEMBLY | E

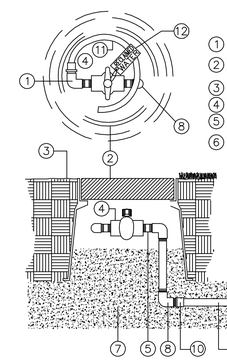

1. INSERT X MIP 90 ELL
2. 10" ROUND VALVE BOX GREEN IN COLOR
3. FINISH GRADE
4. PVC BALL VALVE (F X F)
5. MIP X FIP SCH. 40 PVC ELL
6. SCH 80 PVC NIPPLE LENGTH AS REQUIRED
7. 3/4" CRUSHED GRAVEL SUMP (1 CU. FT.)
8. FIP X FIP SCH. 40 PVC ELL (TWO REQUIRED)
9. PVC LATERAL LINE PIPE
10. SLIP X MIPT SCH. 40 PVC FITTING
11. 18" X 1/2" DIA. FLEX HOSE

NOTE: ALL PIPE AND FITINGS USED WITH RECYCLED WATER SHALL BE PURPLE IN COLOR.

FLUSH VALVE | B

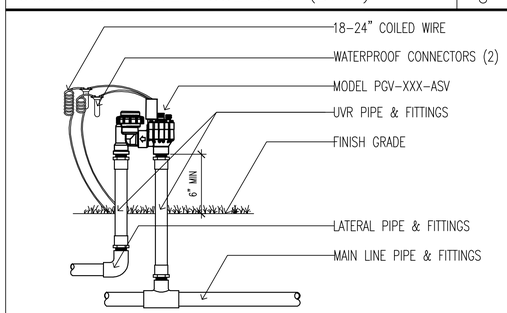

NOTE
ANTI-SIPHON VALVES SHOULD BE INSTALLED 6-12" ABOVE THE HIGHEST SPRINKLER HEAD WITHIN THE ZONE, OR, ACCORDING TO LOCAL CODE.

XX PGV-ASV VALVE
SCALE: 1.5" = 1'-0" Hunter IRRIGATION DETAIL

CONTROL VALVE ASSEMBLY | K

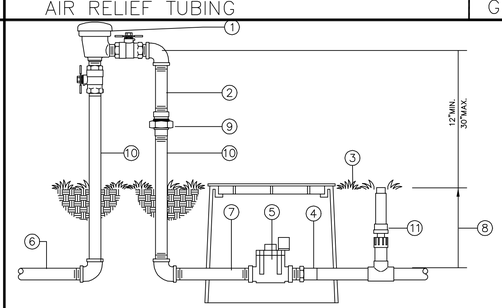

DIRECTION OF FLOW

1. PRESSURE VACUUM BREAKER DEVICE ASSEMBLY
2. GALVANIZED NIPPLE
3. FINISH GRADE
4. THREADED BY SLIP COUPLING
5. CONTROL VALVE IN VALVE BOX
6. FROM WATER SOURCE
7. PVC PRESSURE SUPPLY LINE,
8. TRENCH DEPTH MINIMUM 12"
9. UNION
10. GALVANIZED STEEL RISER
11. IRRIGATION SPRAY HEAD

PRESSURE VACUUM BREAKER | H

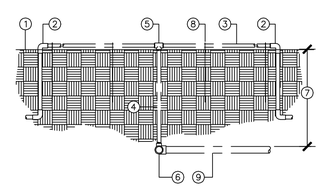

1. FINISH GRADE
2. 3/4" PVC SCH 40 COMPRESSION BY SLIP ELBOW TO 3/4" PVC NIPPLE TO FLUSH VALVE ASSEMBLY.
3. NETAFIM TECHLINE DRIPPER TUBE ON GRADE AND STAKE AT 4' O.C. USING NETAFIM TLS6 SOIL STAPLE.
4. 12" THREADED PVC SCH. 40 RISER
5. PVC SCH. 40 TEE (S X S X T) WITH COMPRESSION FITTINGS
6. PVC SCH. 40 TEE (S X S X T) IN LATERAL LINE PIPE
7. LATERAL LINE DEPTH. REFER TO SPECIFICATIONS
8. NETAFIM TLS6 SOIL STAPLE
9. LATERAL LINE PIPE

INLINE DRIP TUBING ON GRADE | F

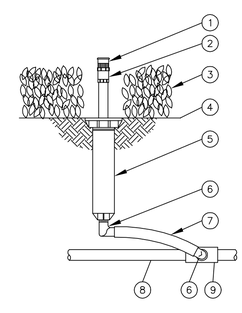

1. PRESSURE COMPENSATING FULL-CIRCLE BUBBLER: RAIN BIRD 1400
2. PLASTIC ADAPTER: RAIN BIRD MODEL PA-80
3. PLANT MATERIAL
4. FINISH GRADE/TOP OF MULCH
5. POP-UP SPRAY SPRINKLER: RAIN BIRD 1804
6. 1/2-INCH MALE NPT x .490-INCH BARB ELBOW: RAIN BIRD MODEL SBE-050
7. SWING PIPE, 12-INCH LENGTH: RAIN BIRD MODEL SP-100
8. PVC LATERAL PIPE
9. PVC SCH 40 TEE OR ELL

POP UP BUBBLER HEAD | C

SAVAGE LAND DESIGN
LANDSCAPE ARCHITECTURE • LAND PLANNING • DESIGN
680 Langsdorf Dr, Suite 202B, Fullerton, CA 92831
P: 714-878-0335
Email: savagelanddesign@att.net

NEW APARTMENT COMPLEX
12761 CASWELL AVE
LOS ANGELES, CA 90066

No.	Revision/Issue	

LICENSED LANDSCAPE ARCHITECT
Michael Savage, Lic. No. 4397
Signature
07-30-21
Date
Exp. Date 7/31/23
STATE OF CALIFORNIA

IRRIGATION DETAILS

Date 07-30-21
Scale
Sheet 6 of 9
Sheet LI-5

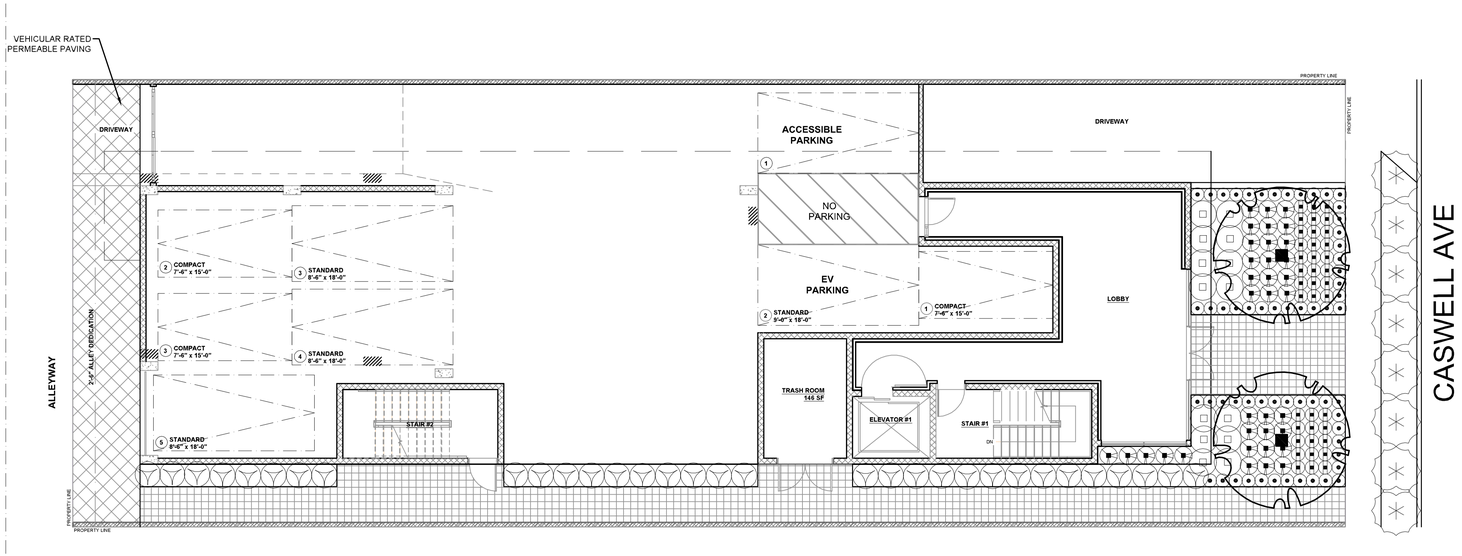

FIRST LEVEL PLAN

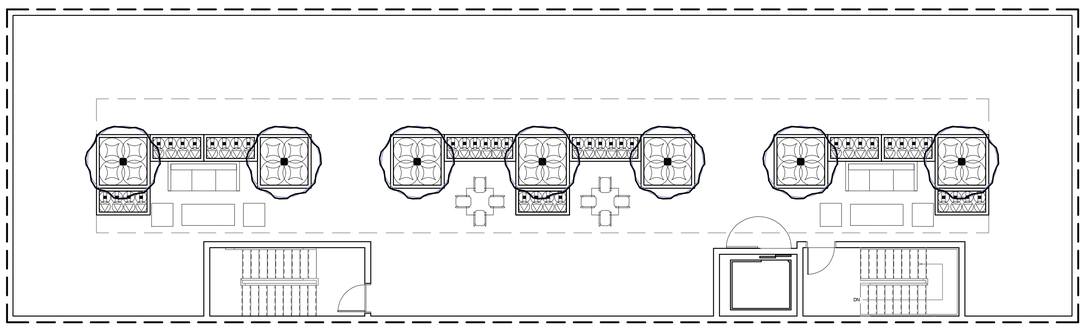

ROOF LEVEL PLAN

GROUND LEVEL PLANTING LEGEND

SYMBOL	DESCRIPTION		SIZE/ SPACING	QTY	WUCOLS	MATURE SIZE (HXW)	TIME TO MATURITY	HYDROZN
SHRUBS								
	CISTUS X PURPUREUS	ORCHID ROCKROSE	5 GAL @ 3' O.C.	14	L	4-6' X 4-6'	2-5 YRS	A
	DIANELLA REVOLUTA 'LIL REV'	LIL REV FLAX LILY	1 GAL @ 18" O.C.	60	L	1-2' X 2-3'	2-5 YRS	A
	WESTRINGIA FRUTICOSA 'BLUE GEM'	BLUE GEM WESTRINGIA	5 GAL @ 3' O.C.	32	L	5-7' X 6-8'	5-7 YRS	A
	ALOE STRIATA	CORAL ALOE	1 GAL @ 18" O.C.	39	L	18" X 1-2'	1-3 YRS	A
	GAURA LINDHEIMERI 'SISKIYOU PINK'	SISKIYOU PINK GAURA	5 GAL @ 5' O.C.	35	L	2-3' X 2-3'	3-6 YRS	A
	LANTANA SELLOWIANA 'WHITE'	TRAILING LANTANA	5 GAL @ 5' O.C.	8	L	2' X 10'	1-3 YRS	A
TREES								
	MELALEUCA QUINQUENERVIA MULTI	PAPER BARK TREE	24" BOX	2	L	20'X15'	10-15 YRS	B

TREE REQUIREMENT

1 TREE PER 500 SF OF FRONT YARD LANDSCAPE AREA.

TOTAL LANDSCAPE AREA (FRONT YARD) = 311 SF

TREES REQUIRED = 1
TREES PROVIDED = 1

ROOF OPEN SPACE AREA = 1,495 SF
LANDSCAPE AREA ON ROOF REQUIRED (25%) = 373.75 SF
LANDSCAPE AREA ON ROOF PROVIDED = 426 SF

ROOF LEVEL PLANTING LEGEND

SYMBOL	DESCRIPTION		SIZE/ SPACING	QTY	WUCOLS	MATURE SIZE (HXW)	TIME TO MATURITY	HYDROZN
SHRUBS								
	PHORMIUM 'PINK STRIPE'	PINK STRIPE NEW ZEALAND FLAX	5 GAL @ 3' O.C.	28	L	4-6' X 4-5'	2-5 YRS	A
	ALOE STRIATA	CORAL ALOE	1 GAL @ 18" O.C.	71	L	18" X 1-2'	1-3 YRS	A
	GRAPTOPETALUM PARAGUAYENSE	GHOST PLANT	1 GAL @ 18" O.C.	40	L	1-2' X 2-3'	3-5 YRS	A
TREES								
	CERCIS OCCIDENTALIS	WESTERN REDBUD	24" BOX	7	L	10-20' X 10-20'	10-15 YRS	B

NOTE ALL PLANTERS AVAILABLE THROUGH THE CHANDLER COMPANY (714)–979–4212. COLOR: STATUARY BRONZE, FINISH: SMOOTH
DETAILS FOR PLANTERS LOCATED ON SHEET LP–2
SHRUBS AND/OR TREES SHALL BE CONTAINED WITHIN PERMANENT PLANTERS AT LEAST 30" IN DEPTH AND LAWN OR GROUND COVER SHALL BE AT LEAST 12" IN DEPTH.

NORTH

0 8' 16' 32'
SCALE: 1/8"=1'-0"

SAVAGE LAND DESIGN
LANDSCAPE ARCHITECTURE • LAND PLANNING • DESIGN
680 Langsdorf Dr, Suite 202B, Fullerton, CA 92831
P: 714-878-0335
Email: savagelanddesign@att.net

NEW APARTMENT COMPLEX
1276-2761 CASWELL AVE
LOS ANGELES, CA 90066

No.	Revision/Issue

LICENSED LANDSCAPE ARCHITECT
Michael Savage, Lic. No. 4397
Signature
07-30-21
Date
Exp. Date: 7/31/21
STATE OF CALIFORNIA

PLANTING PLAN

Date 07-30-21
Scale
Sheet 7 of 9
Sheet LP-1

1. THE CONTRACTOR SHALL PROVIDE A WEED ABATEMENT PROGRAM TO ALL LANDSCAPE PLANTING AREAS PRIOR TO PLANTING, PER THE LANDSCAPE SPECIFICATIONS.

2. THE CONTRACTOR SHALL PROVIDE THE OWNER'S AUTHORIZED REPRESENTATIVE WITH PHOTOGRAPHS OF ALL PLANT MATERIALS NOT PROVIDED BY THE OWNER FOR APPROVAL PRIOR TO PURCHASE AND DELIVERY.

3. NO SUBSTITUTIONS SHALL BE ALLOWED WITHOUT PRIOR WRITTEN CONSENT OF THE OWNER'S AUTHORIZED REPRESENTATIVE.

4. EXACT LOCATIONS OF PLANT MATERIALS SHALL BE APPROVED BY THE OWNER'S AUTHORIZED REPRESENTATIVE PRIOR TO INSTALLATION. THE OWNER'S AUTHORIZED REPRESENTATIVE RESERVES THE RIGHT TO ADJUST PLANTS TO EXACT LOCATION IN THE FIELD.

5. ALL PLANT MATERIAL, UPON INSPECTION BY THE OWNER'S AUTHORIZED REPRESENTATIVE, SHALL BEAR LABELS VERIFYING SPECIES AND VARIETY TO MATCH THOSE ON THE PLANT LIST. THE LANDSCAPE ARCHITECT OR OWNER'S AUTHORIZED REPRESENTATIVE RESERVES THE RIGHT TO REJECT ANY MATERIAL DEEMED TO BE UNACCEPTABLE BOTH AT THE TIME OF DELIVERY OR AFTER DELIVERY IF THE LANDSCAPE ARCHITECT OR OWNER'S AUTHORIZED REPRESENTATIVE IS NOT ON SITE AT THE TIME OF DELIVERY.

6. ALL SHRUB AREAS SHALL BE COVERED EVENLY WITH A THREE INCH (3") MIN. LAYER OF "0–2" APPEARANCE GRADE SHREDDED BARK MULCH. CONTRACTOR SHALL SUBMIT SAMPLE TO LANDSCAPE ARCHITECT FOR APPROVAL PRIOR TO INSTALLATION.

7. NO SHRUB PLANTING SHALL TAKE PLACE UNTIL INSTALLATION OF THE IRRIGATION SYSTEM IS COMPLETE, FINAL GRADES HAVE BEEN ESTABLISHED, PLANTING AREAS PROPERLY GRADED/PREPARED AND THE WORK APPROVED BY THE OWNER'S AUTHORIZED REPRESENTATIVE. TREES SHALL BE SET PRIOR TO IRRIGATION SYSTEM INSTALLATION. CONTRACTOR IS RESPONSIBLE TO VERIFY APPROPRIATE FINAL GRADES PRIOR TO SETTING TREES.

8. TOP OF ROOTBALL FOR TREES AND SHRUBS SHALL BE A MIN. 2" ABOVE THE FINISH GRADE AT THE ORIGINAL PLACE OF GROWTH. REFER TO PLANTING SPECIFICATIONS.

9. THE CONTRACTOR SHALL PROVIDE MATCHING FORMS AND SIZES FOR ALL PLANT MATERIALS WITHIN EACH TYPE AND SIZE DESIGNATED ON THE DRAWINGS.

10. THE CONTRACTOR SHALL PROVIDE A 90 DAY MAINTENANCE PERIOD AFTER COMPLETION AND OWNER ACCEPTANCE OF PLANTING AND IRRIGATION WORK.

11. THE CONTRACTOR SHALL NOT BEGIN SAID MAINTENANCE PERIOD WITHOUT RECEIVING WRITTEN CONSENT FROM THE OWNER AND/OR HIS AUTHORIZED REPRESENTATIVE.

12. ALL WATERING BASINS SHALL BE REMOVED AT THE END OF THE MAINTENANCE PERIOD UNLESS OTHERWISE NOTED.

13. QUANTITIES LISTED ON THE CONSTRUCTION DRAWINGS OR THE PLANTING LEGEND ARE FOR REFERENCE ONLY. THE CONTRACTOR IS RESPONSIBLE FOR VERIFYING THE QUANTITIES LISTED ON THE PLANS.

14. WHERE POSSIBLE TREES SHALL BE KEPT A MINIMUM OF 5'–0" FROM WALLS, FENCES, SIDEWALKS, CONCRETE CURBS AND ANY HARDSCAPE IN GENERAL. IF NOT POSSIBLE CONTACT THE LANDSCAPE ARCHITECT OR OWNER'S AUTHORIZED REPRESENTATIVE FOR EXACT PLACEMENT.

15. FINISH GRADE IN SHRUB AREAS SHALL BE 2" BELOW PAVED SURFACES, 3" WHERE BARK MULCH IS TO BE USED, AND LAWN AREAS SHALL BE 1" BELOW PAVED SURFACES. ALL PLANTING AREAS SHALL DRAIN AT 2% MINIMUM UNLESS OTHERWISE NOTED ON THE GRADING PLANS.

16. INSTALL LINEAR ROOT BARRIERS FOR ALL TREES WITHIN 5' OF ANY CONCRETE FLAT WORK, CURB, GUTTER, UTILITY, STRUCTURES, ETC. ROOT BARRIER SHALL BE AS SPECIFIED WITHIN THE PROJECT SPECIFICATIONS AND INSTALLED PER DETAIL THIS SHEET.

17. CONTRACTOR SHALL ADHERE TO ANY SPECIAL WORKING CONDITIONS, IE. NOISE, TIME OF WORK, LIMIT OF WORK, ETC. SET FORTH BY THE COUNTY OF ORANGE, AND/OR OTHER GOVERNING AGENCIES, AND TO COORDINATE WITH THE GENERAL CONTRACTOR FOR ADDITIONAL INFORMATION/REQUIREMENTS.

18. AGRONOMIC SOIL ANALYSIS WILL BE PROVIDED BY THE LANDSCAPE CONTRACTOR. SOIL TEST SHALL INCLUDE A PERCOLATION TEST AND DRAINAGE RECOMMENDATIONS.

19. RECIRCULATING WATER SYSTEMS SHALL BE USED FOR AL WATER FEATURES.

20. SOIL AMENDMENTS SHALL BE APPLIED PER AGRONOMIC SOIL REPORT SPECIFICATIONS.

21. ON–GRADE TREES 24" BOX SIZE OR LARGER SHALL RECEIVE AN AUGURED SUMP AS DESCRIBED IN THE TREE PLANTING DETAILS, OR OTHER DRAINAGE METHOD AS RECOMMENDED BY THE AGRONOMIC SOILS REPORT.

22. APPLY PRE–EMERGENT HERBICIDE ("EPTAM" OR EQUAL) PER MANUFACTURER'S RECOMMENDATIONS TO SHRUB AREAS ONLY. APPLY 1"–2" WATER FOLLOWING APPLICATION. CONTACT HERBICIDE ("RAD–E–CATE 35" OR EQUAL) SHALL BE APPLIED TO LAWN AREAS ONLY FOLLOWING A 14 DAY MOISTENING PERIOD TO ENCOURAGE WEED GERMINATION. REMOVE ALL WEEDS AND RESIDUE FROM SITE.

23. ALL ROOTBALLS SHALL BE THOROUGHLY WATERED PRIOR TO INSTALLATION.

24. ALL PLANTING SHALL CONFORM WITH ALL LOCAL CODES AND REGULATIONS.

25. FINAL LOCATION OF ALL TREES SHALL BE VERIFIED BY THE LANDSCAPE ARCHITECT IN THE FIELD PRIOR TO INSTALLATION/ PIT EXCAVATION.

26. CONTRACTOR SHALL LIST ANY DOLLAR AMOUNT FOR ADDITIONAL PLANT MATERIALS THAT ARE TO BE SELECTED BY THE LANDSCAPE ARCHITECT AT THE TIME OF INSTALLATION.

27. THE CONTRACTOR SHALL INCLUDE IN HIS BID COSTS AS NECESSARY FOR PENETRATING THROUGH HARD PAN LAYER WHEN IT IS ENCOUNTERED UNDER TREE AND PALM PLANTING PITS. THE PENETRATION THROUGH THE CALICHE OR HARD PAN LAYER SHALL ALLOW WATER TO DRAIN OUT OF THE PLANTING PIT. SHOULD THE HARD PAN LAYER BE TOO DEEP FOR AUGERING, THE LANDSCAPE CONTRACTOR SHALL DEVISE A DRAINAGE SYSTEM APPROVED BY THE LANDSCAPE ARCHITECT THAT WILL ENSURE PROPER DRAINAGE FROM PLANTING PITS. THE LANDSCAPE CONTRACTOR WILL SUBMIT A UNIT COST FOR ANY SPECIAL DRAINAGE SYSTEM.

28. FOR SOILS LESS THAN 6% ORGANIC MATTER IN THE TOP 6 INCHES OF SOIL, COMPOST AT A RATE OF A MINIMUM OF FOUR CUBIC YARDS PER 1,000 SQUARE FEET OF PERMEABLE AREA SHALL BE INCORPORATED TO A DEPTH OF SIX INCHES INTO THE SOIL.

29. PLANT MATERIAL SIZES SPECIFIED IN THE PLANTING LEGEND SHALL MEET THE GENERAL SIZE STANDARDS OF HEIGHT, SPREAD, AND OTHER RELEVANT DATA FOR THE ACCORDING CONTAINER SIZES AS SPECIFIED BY THE PLANT SIZE SPECIFICATIONS OF THE AMERICAN STANDARD FOR NURSERY STOCK BY THE AMERICAN NATIONAL STANDARDS INSTITUTE (ANSI).

GENERAL PLANTING NOTES

THE CHANDLER COMPANY
2621 SOUTH BIRCH STREET
SANTA ANA, CA, USA, 92707
PHONE: (714) 979-4212
FAX: (714) 979-4854
www.thechandlercompany.com

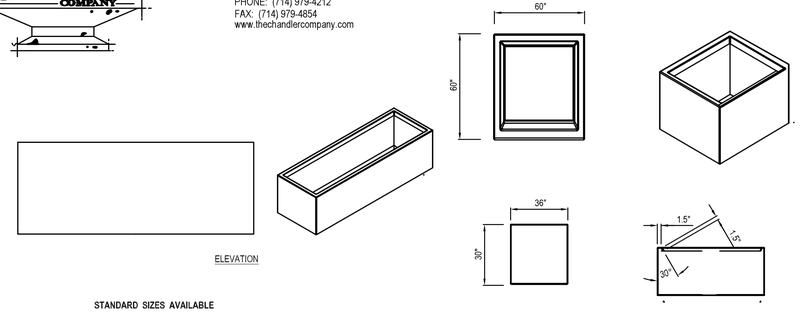

STANDARD SIZES AVAILABLE

STANDARD LENGTHS (L)	WIDTH (W)	HEIGHT (H)
48" 60" 72"	18"	18"
48" 60" 72"	24"	18"
48" 60" 72"	24"	24"
54" 60" 72" 84"	30"	24"
54" 60" 72" 84"	30"	30"
60" 72" 84"	36"	30"
72" 84" 96"	36"	36"

USE CHART TO SPECIFY ____ L ____ W ____ H

AVAILABLE SIZES

HEIGHT X WIDTH	STANDARD DIAMETER
18" X 18"	48", 60", 72"
18" X 24"	48", 60", 72"
24" X 24"	48", 60", 72"
24" X 30"	54", 60", 72", 84"
30" X 30"	54", 60", 72", 84"
30" X 36"	60", 72", 84"
36" X 36"	72", 84", 96"

RECTANGULAR CONTEMPORARY PLANTER
72"X36"X36", 96"X36"X36"

SQUARE CONTEMPORARY PLANTER
36"x36"x72"

CHANDLER COMPANY PLANTERS — C

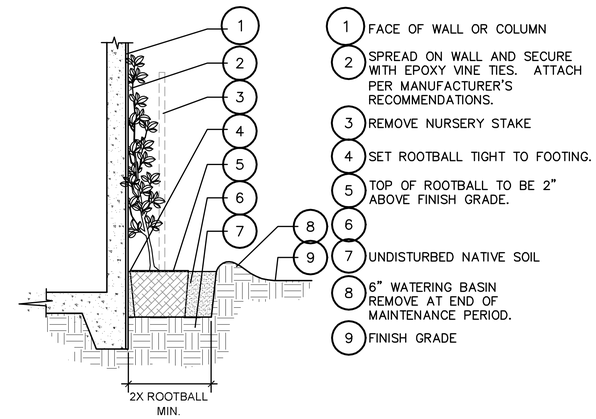

NOTES:
1. REFER ALSO TO PLANTING NOTES OR SPECIFICATIONS.
2. SCARIFY SIDES OF PIT PRIOR TO PLANTING.
3. CENTER ROOTBALL IN PLANTING PIT.
4. MULCH TO BE 6" AWAY FROM THE VINE STEM. REFER TO PLANTING NOTES FOR DEPTH.

N.T.S.

VINE PLANTING — A

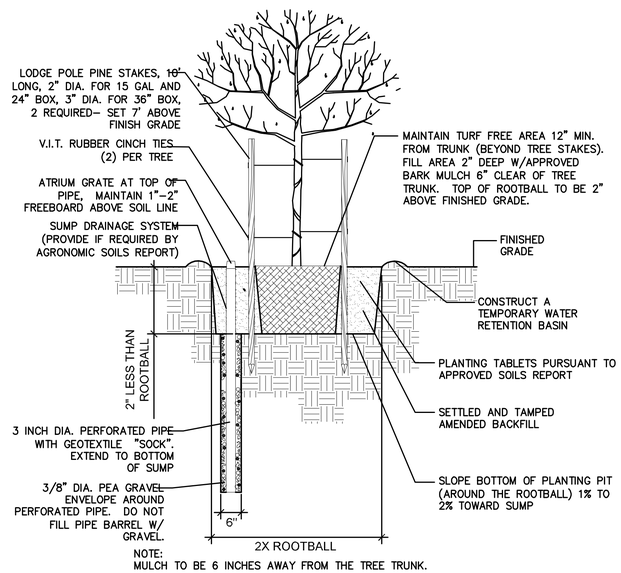

NOTE:
MULCH TO BE 6 INCHES AWAY FROM THE TREE TRUNK.

TREE STAKING — D

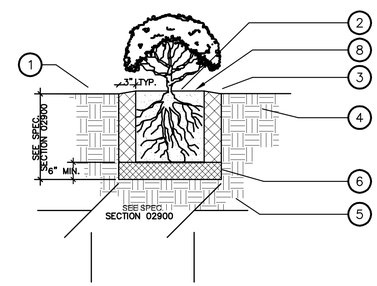

1. FINISH GRADE.
2. CONTAINER PLANT ROOT BALL– CROWN SHALL BE SE 2" ABOVE FINISH GRADE.
3. BACKFILL MIX PER PLANTING SPECIFICATIONS.
4. COMPACTED SUBGRADE PER GEOTECHNICAL SOILS REPORT.
5. NATIVE SOIL.
6. COMPACTED BACKFILL MIX PER PLANTING SPECIFICATIONS.

ALTERNATE SOLUTION:
ONLY EXCAVATE TO NATIVE SOIL TO MINIMIZE COMPACTION AND HELP PREVENT THE ROOTBALL FROM SINKING, IT IS RECOMMENDED THAT THE ROOTBALL EITHER BE PLACED ON GRADE WITHIN THE PLANTING PIT OR THAT THE PLANTING PIT BE DUG 2" SHALLOWER THAN THE ROOTBALL. FINISH GRADE TO BE MOUNDED/CROWNED UP OVER ROOTBALL.

SHRUB PLANTING — B

NORTH

0 8' 16' 32'
SCALE: 1/8"=1'–0"

SAVAGE LAND DESIGN
LANDSCAPE ARCHITECTURE • LAND PLANNING • DESIGN
680 Langsdorf Dr, Suite 202B, Fullerton, CA 92831
P: 714-878-0335
Email: savagelanddesign@att.net

NEW APARTMENT COMPLEX
12761 CASWELL AVE
LOS ANGELES, CA 90066

No.	Revision/Issue

LICENSED LANDSCAPE ARCHITECT
Michael Savage, Lic. No. 4391
Signature
07-30-21
Date
Exp. Date: 7/31/21
STATE OF CALIFORNIA

PLANTING DETAILS

Date 07-30-21
Scale
Sheet 8 of 9
Sheet LP-2

WALLACE LABORATORIES, LLC

365 Coral Circle
El Segundo, CA 90245
phone (310) 615-0116 fax (310) 640-6863

June 24, 2021

Michael Savage, savagelanddesign@att.net
Michael Savage Land Design
680 Langsdorf Drive, Suite 202B
Fullerton, CA 92831

RE: Soil Management Report
12761 Caswell Ave.
Our ID No. 21-174-07, received June 22, 2021

Dear Mike,

The pH is acidic at 6.33. Salinity is modestly high at 3.88 millimho/cm. Chloride is 526 parts per million in the saturation extract.

Nitrogen, phosphorus, potassium, magnesium, iron, manganese, zinc and copper are high. Sulfur is modest. Sodium is modest. SAR (sodium adsorption ratio) is 1.8. Plant-available lead is moderate.

The texture is loam. Based on the non-gravel fraction, it contains 43.4% sand, 32.7% silt and 23.9% clay. The gravel content is 14.7%.

Soil organic matter is good at 7.69% on a dry weight basis. The carbon:nitrogen ratio is good at 10.0.

The estimated rate of water percolation based on Soil Water Characteristics version 6.02.74 model developed by Keith Saxton of the USDA is moderate at 0.92 inches per hour for normal soil compaction. The model is based on the soil texture, percent gravel and percent soil organic matter.

Recommendations

Irrigate deeply initially. Reduce salinity to less than 3 millimho/cm. Lower chloride to less than 150 parts per million in the saturation extract for salt-sensitive plants.

For site maintenance, apply calcium nitrate (15.5-0-0) at 6 pounds per 1,000 square feet about once per quarter. Nitrogen is not currently needed.

Monitor the site with periodic soil and leaf tissue testing. Adjust the maintenance program as needed.

Sincerely,

Garn A. Wallace, Ph. D.
GAW:n

Soil Analyses Plant Analyses Water Analyses

WALLACE LABS	SOILS REPORT	Print Date	Jun. 23, 2021
365 Coral Circle	Location	8315-8319 Greenleaf Ave	
El Segundo, CA 90245	Requester	Michael Savage, Savage Land Design	
(310) 615-0116	graphic interpretation: * very low, ** low, *** moderate		
ammonium bicarbonate/DTPA		**** high, ***** very high	
extractable - mg/kg soil	Sample ID Number	21-174-08	
Interpretation of data	Sample Description	Soil Sample Received 06/22/2021	
low medium high	elements		graphic
0 - 7 8-15 over 15	phosphorus	9.32	***
0-60 60 -120 121-180	potassium	502.24	*****
0 - 4 4 - 10 over 10	iron	5.11	***
0- 0.5 0.6- 1 over 1	manganese	1.77	****
0 - 1 1 - 1.5 over 1.5	zinc	29.15	*****
0- 0.2 0.3- 0.5 over 0.5	copper	14.46	*****
0- 0.2 0.2- 0.5 over 1	boron	0.20	***
	calcium	405.20	****
	magnesium	150.71	*****
	sodium	32.73	*
	sulfur	8.97	*
	molybdenum	0.17	****
	nickel	3.14	**
The following trace	aluminum	n d	*
elements may be toxic	arsenic	2.60	****
The degree of toxicity	barium	1.03	*
depends upon the pH of	cadmium	1.39	**
the soil, soil texture,	chromium	n d	*
organic matter, and the	cobalt	0.02	*
concentrations of the	lead	8.45	***
individual elements as	lithium	0.24	*
well as to their interactions.	mercury	n d	*
	selenium	n d	*
The pH optimum depends	silver	n d	*
upon soil organic	strontium	1.23	*
matter and clay content-	tin	n d	*
for clay and loam soils:	vanadium	0.77	*
under 5.2 is too acidic			
6.5 to 7 is ideal	Saturation Extract		
over 9 is too alkaline	pH value	7.22	***
The ECe is a measure of	ECe (milli-	0.40	**
the soil salinity:	mho/cm)		millieq/l
1-2 affects a few plants	calcium	48.9	2.4
2-4 affects some plants,	magnesium	7.4	0.6
> 4 affects many plants.	sodium	11.7	0.5
	potassium	14.5	0.4
	cation sum		3.9
problems over 150 ppm	chloride	28	0.8
good 20 - 30 ppm	nitrate as N	19	1.4
	phosphorus as P	0.6	0.0
toxic over 800	sulfate as S	10.8	0.7
	anion sum		2.9
toxic over 1 for many plants	boron as B	0.34 **	
increasing problems start at 3	SAR	0.4 *	
est. gypsum requirement-lbs./1,000 square feet		6	
calculated percolation rate inches/hour		0.16	
soil texture		clay	gravel > 2 mm
sand		17.0%	0.3%
silt		39.9%	gravel > 1/4 inch
clay		43.1%	0.0%
lime (calcium carbonate)		no	gravel > 1/2 inch
Total nitrogen		0.166%	0.0%
Total organic carbon		1.638%	
carbon:nitrogen ratio		9.9	
organic matter based on carbon		3.28%	
moisture content of soil		10.1%	
half saturation percentage		32.5%	

Elements are expressed as mg/kg dry soil or mg/l for saturation extract.
pH and ECe are measured in a saturation paste extract. nd means not detected.
Analytical data determined on soil fraction passing a 2 mm sieve.

SAVAGE LAND DESIGN
LANDSCAPE ARCHITECTURE • LAND PLANNING • DESIGN
680 Langsdorf Dr, Suite 202B, Fullerton, CA 92831
P: 714-878-0335
Email: savagelanddesign@att.net

NEW APARTMENT COMPLEX
12761 CASWELL AVE
LOS ANGELES, CA 90066

No.	Revision/Issue	

LICENSED LANDSCAPE ARCHITECT
Michael Savage, Lic. No. 4397
Signature
07-30-21
Date
Exp. Date: 7/31/22
STATE OF CALIFORNIA

SOIL MANAGEMENT REPORT

Date 07-30-21
Scale
Sheet 9 of 9
Sheet SM-1